NIST Special Publication 250-47

NIST MEASUREMENT SERVICES:
NIST Calibration Service for Capacitance Standards at Low Frequencies

Y. May Chang and Summerfield B. Tillett

Electricity Division
Electronics and Electrical Engineering Laboratory
National Institute of Standards and Technology
Gaithersburg, MD 20899-0001

April 1998

U.S. Department of Commerce
William M. Daley, Secretary

Technology Administration
Gary R. Bachula, Acting Under Secretary for Technology

National Institute of Standards and Technology
Raymond G. Kammer, Director

National Institute of Standards and Technology Special Publication 250–47
Natl. Inst. Stand. Technol. Spec. Publ. 250–47, 79 pages (Apr. 1998)
CODEN: NSPUE2

U.S. GOVERNMENT PRINTING OFFICE
WASHINGTON: 1998

For sale by the Superintendent of Documents, U.S. Government Printing Office, Washington, DC 20402–9325

TABLE of CONTENTS

page

LIST of TABLES v

LIST of FIGURES vi

ABSTRACT 1

1. INTRODUCTION 1

2. DESCRIPTION OF SERVICE 2
   2.1 Fused-Silica-Dielectric Capacitance Standards 2
   2.2 Nitrogen-Dielectric Capacitance Standards 3
   2.3 Three-Terminal Air-Dielectric Capacitance Standards 4
   2.4 Two-Terminal Capacitance Standards with HF Coaxial Connectors 4
   2.5 Two- and Three-Terminal Mica-Dielectric Capacitance Standards with Binding Post Connectors 4
   2.6 Capacitance Measurement Assurance Program (C-MAP) 5

3. DESCRIPTION OF MEASUREMENT SYSTEMS 5
   3.1 Type-2 Capacitance Bridge 5
   3.2 Type-12 Capacitance Bridge 6
   3.3 Impedance Meters 8
      3.3.1 Capacitance Meter 8
      3.3.2 Digital Impedance Meter 9

4. CALIBRATION PROCEDURES 9
   4.1 Type-2 Capacitance Measurement System 9
      4.1.1 Fused-Silica-Dielectric Capacitors 10
      4.1.2 Nitrogen-Dielectric Capacitors 10
      4.1.3 Air-Dielectric Capacitors 11
      4.1.4 Two-Terminal Capacitors with HF Coaxial Connectors 11
   4.2 Type-12 Capacitance Measurement System 12
      4.2.1 Two-Terminal Measurements 12
      4.2.2 Three-Terminal Measurements 13

5. QUALITY CONTROL IN THE IMPEDANCE CALIBRATION LABORATORY 15
   5.1. Transfer and Maintenance of the Farad 15
   5.2 Type-2 System and Capacitance Meter 16
   5.3 Type-12 System, Capacitance Meter, and Digital Impedance Meter 16

5.4 Customer's Standards 17

6. REPORTED VALUE AND MEASUREMENT UNCERTAINTY 17

7. CONCLUSION 18

8. REFERENCES 18

TABLES 20

FIGURES 31

APPENDIX 54

A1. General Information on Fused-Silica-Dielectric Standard Capacitors 55
A2. Typical REPORT OF CALIBRATION for Fused-Silica-Dielectric Standard Capacitors 57
A3. General Information on Nitrogen-Dielectric Standard Capacitors 59
A4. Typical REPORT OF CALIBRATION for Nitrogen-Dielectric Standard Capacitors 61
A5. Description of Tests used to Determine the Effect of Small Mechanical Stress on High Stability, Nitrogen-Dielectric Standard capacitors 63
A6. Typical REPORT OF CALIBRATION for Test Results of the Effect of Small Mechanical Stress on Nitrogen-Dielectric Standard Capacitors 65
A7. General Information on Three-Terminal Standard Capacitors 67
A8. Typical REPORT OF CALIBRATION for Three-Terminal Standard Capacitors 69
A9. General Information on Two-Terminal Standard Capacitors with Precision Coaxial Connectors 71
A10. Typical REPORT OF CALIBRATION for Two-Terminal Standard Capacitors with Precision Coaxial Connectors 73
A11. General Information on Mica-Dielectric Standard Capacitors with Binding Post Connectors 75
A12. Typical REPORT OF CALIBRATION for Mica-Dielectric Standard Capacitors with Binding Post Connectors 77

List of Tables

Table 1. Summary of Standard Capacitors Acceptable for Calibrations 20
Table 2. Summary of Reference and Check Standards of the Type-2 Bridge 21
Table 3. NIST Calibration Design for Fused-Silica-Dielectric Standard Capacitors . . . 22
Table 4a. NIST Calibration Design for 10 pF Nitrogen-Dielectric Standard Capacitors . . 23
Table 4b. NIST Calibration Design for 100 pF Nitrogen-Dielectric Check Standards . . . 23
Table 4c. NIST Calibration Design for 1000 pF Nitrogen-Dielectric Check Standards . . . 23
Table 4d. NIST Calibration Design for One 100 pF (or 1000 pF) Nitrogen-Dielectric Standard Capacitors 24
Table 4e. NIST Calibration Design for Two 100 pF (or 1000 pF) Nitrogen-Dielectric Standard Capacitors 24
Table 4f. NIST Calibration Design for Three 100 pF (or 1000 pF) Nitrogen-Dielectric Standard Capacitors 24
Table 5. NIST Large Uncertainty Calibration Design for Nitrogen- and Air-Dielectric Standard Capacitors 25
Table 6. Summary of Check Standards of the Type-12 Bridge 26
Table 7. Calibration Uncertainties of Fused-Silica- and Nitrogen-Dielectric Standard Capacitors 27
Table 8. Calibration Uncertainties of Air-Dielectric and Two-Terminal HF Coaxial Connector Standard Capacitors 28
Table 9. Calibration Uncertainties of Capacitance Values of Two- and Three-Terminal Mica- Dielectric Standard Capacitors 29
Table 10. Calibration Uncertainties of Conductance Values of Two- and Three-Terminal Mica- Dielectric Standard Capacitors 30

List of Figures

Figure 1a. Schematic Diagram of the NIST Type-2 Capacitance Bridge 31
Figure 1b. Simplified Circuit Diagram of the NIST Type-2 Capacitance Bridge 32
Figure 2a. Schematic Diagram of the NIST Type-12 Capacitance Bridge 33
Figure 2b. Simplified Circuit Diagram of the NIST Type-12 Capacitance Bridge (Generally Showing only the Capacitance Components) 34
Figure 3. The NIST Type-12 Capacitance Bridge with Conductance Components 35
Figure 4. Block Diagram of Measurement Process and Standards being Used in the Impedance Calibration Laboratory 36
Figure 5. NIST Reference Adapter for Two-Terminal HF Coaxial Connector Capacitors 37
Figure 6. Connection of Reference Adapter and HF Coaxial Connector Capacitors 38
Figure 7. Fixture (P2) Used with the Type-12 Bridge for Two-Terminal Capacitance Measurements 39
Figure 8. Components of the Type-12 Bridge for Two-Terminal Capacitance Measurements 40
Figure 9. Fixture (P3) Used with the Type-12 Bridge for Three-Terminal Capacitance Measurements 41
Figure 10. Components of the Type-12 Bridge for Three-Terminal Capacitance Measurements 42
Figure 11. Average Values of Four Reference Standards (10 pF Oil-Bath Type) at Reference Temperature Values 43
Figure 12. Block Diagram of the Farad Transfer and Calibration Process Using the Type-2 Bridge 44
Figure 13. NIST Reference Standard #102 (10 pF Air-Bath Type) 45
Figure 14. NIST Reference Standard #131 (100 pF Air-Bath Type) 46
Figure 15. NIST Check Standard #1865 (1000 pF Nitrogen-Dielectric Capacitor) 47
Figure 16. Data of NIST Check Standard #1865 Measured by Using the Type-2 Bridge and C-Meter 48
Figure 17a. Measurement Differences of 1000 pF Customer's Capacitors between using the C-Meter and the Type-2 Bridge 49
Figure 17b. Measurement Differences of 100 pF Customer's Capacitors between using the C-Meter and the Type-2 Bridge 50
Figure 17c. Measurement Differences of 10 pF Customer's Capacitors between using the C-Meter and the Type-2 Bridge 51
Figure 18. Three-Terminal Measurements of NIST Check Standard #27620 (0.01 μF Mica- Dielectric Capacitor) 52
Figure 19. Data of NIST Check Standard #27620 Measured by Using the Type-12 Bridge, C-Meter, and DIM 53

NIST Calibration Service for Capacitance Standards at Low Frequencies

Y. May Chang and Summerfield B. Tillett

ABSTRACT - This document describes the capacitance calibration service provided by NIST, including measurement procedures and systems used to calibrate capacitance standards of nominal values in the range of 0.001 pF to 1 μF, at frequencies up to 10 kHz. Discussed are the process to transfer the unit of capacitance from the NIST capacitance primary laboratory, which maintains the U.S. representation of the farad, realized by the calculable capacitor, and the quality controls of reference standards and check standards in the calibration laboratory. Also included are summaries of calibration uncertainties of capacitors of various dielectric materials, such as fused-silica, nitrogen, air, and mica.

1. INTRODUCTION

Most standards laboratories use one or a group of capacitance standards as a reference to maintain the unit of capacitance and to compare to unknown capacitors. NIST provides a calibration service for capacitance standards of various dielectric materials, including fused-silica, nitrogen, air, and mica, and of nominal values in the range between 0.001 pF and 1 μF, at frequencies of (66, 100, 400, 1000, and 10 000) Hz, as shown in Table 1. The primary reference of the NIST Impedance Calibration Laboratory (ICL) is a group of NIST-made 10 pF oil-bath type, fused-silica-dielectric capacitors, whose values are traceable to the NIST calculable capacitor, which is used as the U.S. realization of the farad [1]. ICL staff also maintain a pair of commercial air-bath type, fused-silica-dielectric capacitors used as secondary reference standards having one 10 pF and one 100 pF capacitor in each temperature-controlled air bath, and a group of check standards of nominal values of (1, 10, 100, 1000, and 10 000) pF. The secondary references are calibrated against the primary reference periodically by using a transformer ratio capacitance measuring system [2], known as the "Type-2" bridge, at 1:1 and 1:10 ratios. The Type-2 bridge is also utilized to measure the NIST check standards and customer's standards with coaxial connectors.

There is another system in the ICL, a resistance-ratio-type capacitance measuring system, known as the "Type-12" bridge. It is mainly used to measure mica-dielectric capacitors with binding post connectors. The references of the Type-12 bridge are internal dial[1] capacitors, which have corrections that are traceable to the reference used with the Type-2 bridge. Commercial impedance meters also have been utilized to support capacitance calibrations in the ICL after being characterized in terms of NIST standards.

---

[1] The term dial as used in this document refers to the settings or values of adjustable components used to balance bridges.

2. DESCRIPTION OF SERVICE

NIST offers a calibration service for capacitance standards in a wide range of capacitance values and geometrical configurations in the audio-frequency range. Three-terminal fused-silica-, nitrogen-, and air-dielectric standard capacitors with GR874[2] coaxial connectors and with nominal values of (1, 10, 100, 1000, and 10 000) pF can be calibrated at frequencies of 100 Hz, 400 Hz, and 1 kHz. Two- and three-terminal mica-dielectric capacitors with exposed binding-post connectors, in the range from 0.001 pF to 1 μF, can be calibrated at frequencies up to 10 kHz. Two-terminal air- and mica-dielectric capacitors with high-frequency (HF) GR900 coaxial connectors, including the GR900 terminations, are calibrated only at 1 kHz. Table 1 contains a summary of the commonly known capacitance standards that are accepted for calibration with the stated configurations at the specified frequencies. Requests for capacitance types other than those described in Table 1 are handled under the category of "Special Test", which requires prearrangement with NIST personnel. Additionally, NIST provides a MAP transfer service, known as the Capacitance Measurement Assurance Program (C-MAP) for capacitance standards at the 100 pF and 1000 pF levels and at a frequency of 1 kHz [3]. In the ICL, all capacitors except fused-silica-dielectric capacitors, are measured at an ambient temperature of 23 °C ± 1 °C and relative humidity levels of less than 50 percent.

It is the customer's responsibility to ensure that the capacitance standard received by NIST is in good working condition, i.e. having tight connectors and good solder joints. The capacitor will be returned to the customer without calibration if it is found to be defective, or its connector has been modified, unless prior arrangements are made.

When a Report of Calibration is issued to the customer, general information on each type of standard capacitor is also enclosed. Examples of the report and the information of various types of capacitors submitted for calibration are included in the Appendix.

Detailed information on calibration services at NIST is described in the NIST Special Publication 250 (SP250) [4]. The cost of services is listed in the Fee Schedule which is the Appendix of SP250 and is updated periodically.

2.1 Fused-Silica-Dielectric Capacitance Standards

Due to the magnitude of their temperature coefficient, approximately 10 ppm/ °C, fused-silica-dielectric standard capacitors are designed for use in temperature controlled ovens, either air baths or oil baths. Unless the air-bath type capacitors are submitted in temperature-controlled ovens with temperature sensors having a resolution of 0.001 °C, the ICL staff will provide, where possible, temperature measurements using standard platinum resistance thermometers taken at the time of the measured capacitance value.

---

[2] Commercial connectors or standards are identified in this technical note only to specify that these are being used to perform measurements. It is not to be taken as a recommendation or endorsement by NIST, nor does it imply that these are necessarily the best available connectors and standards for the purpose.

Model GR1408 is a typical commercial air-bath type, fused-silica-dielectric capacitance standard with nominal values of 10 pF and 100 pF, that is accepted for calibrations at frequencies of 100 Hz, 400 Hz, and 1 kHz. Since the exact temperature coefficients of individual capacitors are unknown, no correction for temperature is made, however, both the capacitance values of GR1408 capacitors and the air-bath temperature at the time of measurement are reported. Model AH11A (with nominal values of 1 pF, 10 pF, and 100 pF) is another type of commercial air-bath, fused-silica capacitor that is accepted for calibrations at the above three frequencies. However, this model of capacitor is completely sealed within a temperature-controlled oven, without any possibility to measure the oven's internal temperature. Since the actual temperature of the capacitor cannot be measured, it is not reported. Both the capacitance value of the AH11A capacitor and the temperature display reading taken at the time of measurement are reported. AH11A capacitors with nominal values other than (1, 10, and 100) pF are acceptable for calibration as "Special Test".

All oil-bath type, fused-silica capacitors are also acceptable for calibration as "Special Test". These are measured in the oil bath in the ICL at a temperature of 25 °C ± 0.01 °C.

2.2 Nitrogen-Dielectric Capacitance Standards

Nitrogen-dielectric capacitors are the most common standard capacitors at the 10 pF, 100 pF, and 1000 pF levels. Models GR1404 and ESI SC1000, commercially-made capacitors with parallel-plates, are the typical capacitors that are accepted for calibrations at frequencies of 100 Hz, 400 Hz, and 1 kHz.

There are two different types of measurements performed on these capacitors according to the desired uncertainty level of the calibration. The "large-uncertainty" calibration is performed at laboratory conditions with an uncertainty of 25 ppm[3]. The "small-uncertainty" calibration process monitors the capacitor for a longer period of time under a physically stable condition with an uncertainty as low as 4 ppm [6].

Also, a supplementary test should be considered for new standards whose properties with regard to transportation and mechanical shocks are not known. This series of physical tests determines the relative effect on the capacitance resulting from various impacts and changes in orientation [7]. These tests which simulate the conditions during shipping of the capacitor, normally are performed prior to the small- uncertainty measurement to estimate the variation of the capacitance values during shipment. The maximum variations in capacitance values for each type of physical test are reported. Requests for calibrations at the small-uncertainty level without performing the physical tests are also accepted. NIST issues separate calibration reports for each of the above measurements.

---

[3] The term uncertainty as used in this document refers to the relative standard uncertainty when the unit is expressed in ppm [5].

2.3 Three-Terminal Air-Dielectric Capacitance Standards

A typical example of a three-terminal air-dielectric capacitance standard is the model GR1403 with nominal values that range from 0.001 pF to 1000 pF. Another example, the model GR1615-P1, has a nominal value of 10 000 pF. GR1403 capacitors are accepted for calibration and tested at a laboratory temperature of 23 °C ± 1 °C, and at frequencies of 100 Hz, 400 Hz, and 1 kHz, while GR1615-P1 capacitors are calibrated only at 1 kHz. The total uncertainty of calibration ranges between 100 ppm and 2000 ppm, according to the nominal value of the capacitor and the nominal measurement frequency. The calibration uncertainties are described in detail in [6], and summarized later in this document (section 4.1.3).

2.4 Two-Terminal Capacitance Standards with HF Coaxial Connectors

This category of two-terminal capacitance standards is mainly used for the calibration of high-frequency bridges and other impedance measuring instruments. These normally have GR900 coaxial connectors, which have a known reference plane to separate the bridge and the standard capacitor to improve the performance of the standards up to radio frequency range. Models GR1405 (with capacitance values from 1 pF to 20 pF), GR1406 (with capacitance values from 50 pF to 1000 pF), and GR1407 (with capacitance values from 0.001 μF to 0.1 μF) are all accepted for calibration at a frequency of 1 kHz.

In addition, ICL staff provide calibration services for capacitors with standard terminations such as the open-circuit-termination models GR900-WO and GR900-WO4, at a frequency of 1 kHz.

The total uncertainties of calibration for the above standards range from 75 ppm to 1000 ppm, and are described in detail in [6], and summarized in a later part of this document (section 4.1.4).

2.5 Two- and Three-Terminal Mica-Dielectric Capacitance Standards with Binding Post Connectors

The most common examples of this type of capacitance standard are the models GR1409 and GR509, which can be measured at frequencies of 66 Hz, 100 Hz, 400 Hz, 1 kHz, and 10 kHz, in two- or three-terminal configurations, according to the appropriate terminal connections. Capacitance and conductance values are given in the Report of Calibration for this type of capacitor and represent the equivalent parallel capacitance and conductance values of the capacitor.

When the capacitor is shipped to NIST, it is important that the customer specifies whether the capacitor is to be measured in two- or three-terminal configuration.

Measurements of other models of mica-dielectric capacitors with different types of connectors, or at frequencies higher than 10 kHz, would be considered for calibration as "Special Test" by prearrangement.

2.6 Capacitance Measurement Assurance Program (C-MAP)

This is a recently re-established measurement service implemented using a commercial meter (based on fused-silica reference capacitors) as a transport standard to measure capacitance standards with nominal values of 100 pF and 1000 pF, at a frequency of 1 kHz. Besides determining the values of customer's capacitance standards, the C-MAP is used to evaluate the customer's capacitance measurement system. The C-MAP has the advantage that the customer's standards remain in their laboratory to reduce the down-time due to the absence of the standards, and to avoid any changes of values due to transportation. The Type-A uncertainties of the C-MAP are usually lower than those of the regular calibration because the changes of values in the customer's capacitors due to shipping and hysteresis effects from variation of environmental conditions do not enter into the experiment. The NIST C-MAP service is described in detail by Chang [3].

3. DESCRIPTION OF MEASUREMENT SYSTEMS

The NIST capacitance calibration facility consists of two major measurement systems. One is the Type-2 bridge, which is mainly used to calibrate high-quality standards (such as nitrogen-, air-, and fused-silica-dielectric capacitors) with shielded terminals, and of nominal values up to 10 000 pF at frequencies of 100 Hz, 400 Hz, and 1 kHz. The other is the Type-12 bridge, which is a resistance-ratio capacitance measuring system for calibration of mica-dielectric capacitors with exposed terminals, and having nominal values from 0.001 μF to 1 μF, at frequencies of (66, 100, 400, 1000, and 10 000) Hz. Recently, two commercial impedance meters that have been carefully characterized using NIST standards are also used to support capacitance calibrations.

3.1 Type-2 Capacitance Bridge

The NIST Type-2 bridge is a transformer-ratio capacitance bridge using both external capacitors and internal capacitors to perform measurements of unknown capacitors. Figure 1a is the schematic diagram of the Type-2 bridge. Construction of the bridge components and bridge operation procedures were described in detail by Cutkosky [2]. As illustrated in Fig. 1a, the internal capacitors are a set of eight fixed-cylindrical air capacitors with values ranging from 10^{-5} pF to 100 pF to provide a total capacitance up to 111 pF. These capacitors are connected to the voltage taps of the transformer via linear switches to form the equivalent of a decade capacitance of each capacitor by using dial (or switch) settings. During calibrations, an unknown capacitor is compared to a reference capacitance standard whose value is well defined, and the dial settings of the internal capacitors are adjusted to obtain a balance of the bridge. The reference capacitor and the unknown capacitor are connected to the bridge terminals at ratios of 1:1, 10:1, or 1:10, according to their nominal values. One of the internal capacitors (of nominal value of 1 pF) is constructed as a temperature-compensated capacitor, as described in detail in [8]. Other internal capacitors can be calibrated against the 1 pF unit immediately after it is compared to a reference capacitance standard. The capacitance value of the unknown is determined from the dial readings and corrections of the internal

capacitors, and the value of the reference standard.

In addition, the Type-2 bridge has a conductance balance circuit, also described in [8], to measure the conductance component of the unknown capacitor. As shown in Fig. 1a, the conductance balance is controlled by a set of four dials and a multiplier switch to provide a total conductance from 10^{-8} μS to 1 μS. There is another switch which reverses the sign of the conductance component to allow the measured components to have greater or less conductance than the internal capacitors. Figure 1b is a simplified circuit diagram showing the Type-2 bridge, where C_s is the reference capacitor, C_x is the unknown capacitor to be calibrated, C_d is the sum of internal dial capacitors, G_a is the conductance of the internal capacitors, G_r is the settings of the conductance dials, and M is the multiplier switch for the conductance readings. The conductance balance control provides an in-phase balance to compensate for the difference in the loss components of the reference, internal, and unknown capacitors in order to obtain a precise comparison of the unknown capacitor and the reference capacitor. The uncertainty of the conductance dial readings, which depends on the ac characteristics of a fixed metal film resistor, is very large, about 1%, but the conductance measurement of unknown capacitors using the Type-2 bridge is not reported for NIST calibrations.

3.2 Type-12 Capacitance Bridge

The NIST Type-12 bridge is a resistance-ratio capacitance measurement system using internal standards as the reference and is used to calibrate customer's mica capacitors. This type of bridge was originally designed by Bell Laboratories in 1942 [9] to provide precision measurements of capacitance up to 1.11 μF and conductance up to 1000 μS. Later on, an improved unity-ratio admittance bridge, known as the Type-12 capacitance bridge was developed, also by Bell Laboratories, with a capacitance divider to measure low capacitance values and multi-range, direct-reading conductance standards. Figure 2a is the schematic of the Type-12 bridge. Specifications of bridge components and internal standards, and operation procedures of the Type-12 bridge were described in detail by Wimhelm [10]. As illustrated in Fig. 2a, the internal standards consist of two mica capacitance standards (represented schematically as one standard, C_M), three air differential capacitance standards (represented as C_A), and two differential conductance (resistance) standards (represented as G_S). Each standard is adjustable with ten steps to be interpreted as dial readings. The dials of C_M cover from (0.1 to 1) μF and from (0.01 to 0.1) μF. The dials of C_A cover from (0.001 to 0.01) μF, (0.0001 to 0.001) μF, and (0.00001 to 0.0001) μF, plus a continuously adjustable capacitor providing a capacitance range of (11 ± 0.5) pF. A mica capacitor of 0.005 μF (not shown in Fig. 2a) is used as a transfer standard and is measured using the Type-2 bridge, and then used to calibrate the 0.01 μF steps of C_M (the lowest step of mica dials) and of C_A (the highest step of air dials) of the Type-12 bridge. All other steps of mica and air dials are calibrated from the 0.01 μF steps to be used as reference, in terms of dial corrections. The dials of G_S, from (10 to 100) μS and from (100 to 1000) μS, plus a continuously adjustable dial with range of (-1 to 11) μS, are calibrated by resistance standards. During calibration measurements, both capacitance and conductance dials are used simultaneously to obtain a balance, and both capacitance and conductance values of the customer's capacitor are reported.

Figure 2b is a simplified diagram of the Type-12 bridge showing only the components which need to be considered for capacitance measurements. C_X is the unknown capacitor to be measured, which

is connected to arm AD and/or arm CD, according to the measurement configurations. R_1 and R_2 are resistors with a ratio of 1:1, C_m is the value of C_M, and C_a and C_c are the effective capacitance from the differential air capacitors, C_A, on arms AD and CD, respectively, such that:

$$C_a + C_c = C \quad \text{(a constant)} . \tag{1}$$

In addition, each dial of C_A is arranged so that the dial reading indicates the difference of the effective capacitance between arms AD and CD, plus the constant capacitance C, such that:

$$C_r = (C_a - C_c) + C , \tag{2}$$

where C_r is the value of C_A corresponding to the dial reading, r.

By substituting Eq. (1) into Eq. (2), it becomes:

$$C_r = 2\, C_a . \tag{3}$$

Let C_{A1}, C_{A2}, and C_{A3} represent the three dials of C_A for 0.001 μF/step, 0.0001 μF/step, and 0.00001 μF/step, respectively. Using C_{A3} as an example, the total capacitance of this dial is equal to 50 pF (= C), and contains a set of four capacitors of 5 pF, 10 pF, 15 pF, and 20 pF. When the dial readings of C_{A3}, r_3, are increased from 0 to 1, 1 to 2, ..., and 9 to 10, these capacitors are switched back and forth individually between arms CD and AD to achieve the relationship in Eq. (1). The capacitance values corresponding to the dial readings are obtained in accordance with Eq. (3) and to the following procedure to switch these capacitors:

At dial reading $r_3 = 0$, all four capacitors are on arm CD, then
$C_{c3} = 50$ pF and $C_{a3} = 0$; therefore, $C_{r3} = 0$.

At dial reading $r_3 = 1$, the 5 pF capacitor is on arm AD, the other three are on arm CD, then
$C_{c3} = 45$ pF and $C_{a3} = 5$ pF; therefore, $C_{r3} = 10$ pF.

At dial reading $r_3 = 2$, the 10 pF capacitor is on arm AD, the other three are on arm CD, then
$C_{c3} = 40$ pF and $C_{a3} = 10$ pF; therefore, $C_{r3} = 20$ pF.

At dial reading $r_3 = 10$, all four capacitors are on arm AD, and then
$C_{c3} = 0$ and $C_{a3} = 50$ pF; therefore, $C_{r3} = 100$ pF.

The final value of C_r is the sum of the values of all three air dial capacitors, C_{r1}, C_{r2}, and C_{r3}.

Similar to the internal air capacitors, the conductance standard of the Type-12 bridge is a differential-

type standard, independently connected to arms AD and CD such that the sum of conductance of both arms is a constant. Figure 3 is a simplified diagram of Type-12 bridge that includes the conductance components in each arm, and a divider resistor, R_K, (see Fig. 2a), which serves as a range shifter, K_g, so that the reading of the conductance standard is divided by 1, 10, 100, 1000, or 10 000. G_x is the conductance component of the unknown capacitor, C_x. Specifications and operating procedures of conductance standard of the Type-12 bridge were described in detail by Wimheim [10]. As shown in Fig. 2b, (G_a / K_g) and (G_c / K_g) are effective conductances on arm AD and arm CD, respectively, and the quantity ($G_a + G_c$) is equal to a constant. Both the decades and the variable dials of the conductance standard provide readings to cover the required range and keep the sum of G_a and G_c a constant.

The Type-12 system is used mainly to measure two- and three-terminal mica capacitors with binding-post connectors from 0.001 μF to 1 μF. Accordingly, two special fixtures have been constructed to be used for two- and three-terminal measurements, designated as P2 and P3, respectively. These fixtures have binding post connectors, such that the capacitors can be plugged into the bridge via either P2 or P3 directly without using cables, in order to eliminate lead impedance. Detailed descriptions of P2 and P3 are given later in this document (sections 4.2.1 and 4.2.2).

3.3 Impedance Meters

The advantage of using impedance meters is that measurements can be performed and results can be transferred automatically to a computer. This reduces both the measuring time and possibilities for human errors when hand-written data are being transferred. Presently, there are two types of commercial impedance meters being used to support the NIST capacitance calibration service.

3.3.1 Capacitance Meter

This type of Capacitance Meter employed in the ICL (hereafter referred to as the C-Meter) measures capacitors with respect to internal temperature-controlled, fused-silica-dielectric capacitors. It has a resolution up to one part in 10^8, but operates only at a frequency of 1 kHz. It was evaluated by carrying out two separate pilot programs [11], and is now used as the transfer standard in the NIST C-MAP service, and to support the calibration of standard capacitors at a frequency of 1 kHz.

The C-Meter is utilized to perform measurements, at a frequency of 1 kHz, on nitrogen-dielectric capacitors in the large uncertainty tests (25 ppm); on air-dielectric capacitors; during the physical tests on the nitrogen-dielectric capacitance standards to observe the changes in capacitance values; and on two-terminal capacitance standards with HF coaxial connectors, including the standard terminations.

The C-Meter is characterized by using it to monitor the NIST check standards of mica-dielectric capacitors at 1 kHz. It is used to calibrate customer's mica-dielectric capacitors at 1 kHz by using the "substitution method" [12], as discussed in the following section (3.3.2).

3.3.2 Digital Impedance Meter

This type of Digital Impedance Meter employed in the ICL (hereafter referred to as DIM) uses standard ac resistors as internal references and measures standard capacitors, inductors, and ac resistors, over a frequency range from 12 Hz to 1 MHz. The DIM does not have the precision achievable with the C-Meter, but operates at multiple frequencies. It is also characterized by using it to monitor the NIST mica-dielectric check standard capacitors at various frequencies. The DIM is used to calibrate customer's mica-dielectric capacitors at 1 kHz, and will be used at other frequencies after the database of check standards is established at other frequencies.

The process of characterization of a meter is to use the meter to monitor the NIST check standards for a period of three years or more, and to compare the data with those obtained from the NIST Type-12 bridge. During the calibration of customer's standards, both the customer's standard and the NIST check standard of the identical nominal value are measured using the meter. A predicted value of the NIST check standard is obtained by using the linear regression analysis performed on its database of the Type-12 measurements . The measured value of the customer's standard is adjusted by using the difference of the predicted value and the measured value of the NIST check standard. Detailed description of such process is given in [12], as the "substitution method".

The DIM is also utilized to perform "Special Test" measurements, especially in responding to requests for capacitance measurements at frequencies not specified in SP250.

4. CALIBRATION PROCEDURES

4.1 Type-2 Capacitance Measurement System

As mentioned previously, the Type-2 system, with its internal capacitors, is used to compare customer's standards with shielded terminals to external NIST reference standards. Due to the unknown temperature coefficients of the internal bridge capacitors, it is necessary to calibrate them immediately prior to performing the measurements in order to obtain the uncertainty required. The procedure used to calibrate the internal dial capacitors of the Type-2 bridge and the equations used to calculate the dial corrections are discussed in detail by Chang [6]. The Type-2 bridge is also employed to transfer the unit of capacitance from the Primary Standards Laboratory (PSL) to achieve traceability of the unit of the farad.

The process of using the Type-2 bridge to measure customer's standards is based on use of redundant measurement designs in calibration, as described by Cameron [13]. The procedure is to perform a sequence of measurements in accordance with the calibration design to redundantly intercompare a number of reference standards and unknowns. The solution to the design provides true values for each of the unknowns based on the known value of the reference standard, and the design also provides an estimate of the Type-A measurement uncertainty. Table 2 is a list of NIST reference standards and the check standards of the Type-2 system.

The calibration design used in the ICL is similar to the experimental designs for groups of 3, 4, and 5 standards, described by Eicke and Cameron [14]. For example, the design for a group of 3 standards is to perform intercomparison of these standards six times by connecting them to the positive (+) and negative (−) output terminals of the Type-2 bridge (see Fig. 1b), thus performing a left-right balance in order to eliminate certain systematic errors. Table 3 illustrates the experimental design for three different groups (A, B, and C) of 3 standards, which are used in the ICL as the three measurement sets for the calibration of fused-silica standard capacitors of nominals of 1 pF, 10 pF, and 100 pF, respectively. In Table 3, each row represents one measurement, and the symbols of +1, −1, +0.1, and −0.1 under each capacitor refer to the connections of one end of the capacitor to the respective output terminals of the Type-2 bridge, to obtain ratios of 1:1 and 10:1, as shown in Fig. 1b. In each group, there are six measurements to be performed by using the primary reference to compare and determine the values of the secondary reference and one customer's standard, or two customer's standards if it is requested. Figure 4 is a block diagram to illustrate the measurement process and the standards being used in the ICL to transfer the capacitance value from the primary reference (in the oil bath) to the customer's standards of various nominal values and dielectrics.

4.1.1 Fused-Silica-Dielectric Capacitors

Customer's fused-silica capacitors, as well as ICL secondary reference standards (nominal values of 10 pF and 100 pF), are calibrated, at ratios of 1:1 and 10:1, respectively, directly against the ICL primary reference, maintained in the oil bath. The procedure also requires recording the values of the resistive temperature sensors of oil-bath type capacitors and the temperatures of air-bath type capacitors. The value used for the primary reference is corrected from the predicted value at reference temperature (in terms of resistance value), using the known temperature coefficient and the resistive sensor value at the time of measurement. Calibration results of air-bath capacitors are not temperature corrected and, hence, reflect both capacitance and temperature variations.

Since the temperature coefficients of customer's air-bath type, fused-silica capacitors are unknown, it is necessary to perform multiple measurements over a two- to three-week period to compare the variations in capacitance to measurements of similar capacitors to determine if the capacitor is behaving normally. Both the average capacitance value and the average temperature are reported.

The calibration design for fused-silica capacitors in the ICL is that used for groups of 3 standards (see Table 3), which requires three standards to perform one set of measurements. Therefore, the secondary reference is used if only one unknown fused-silica capacitor is being calibrated.

4.1.2 Nitrogen-Dielectric Capacitors

Measurement process and standards used for the calibration of nitrogen-dielectric capacitors are illustrated in Fig. 4, Tables 4a to 4f, and discussed in the following.

Customer's nitrogen-dielectric capacitors of nominal value of 10 pF are calibrated directly with the secondary reference #102 and the NIST check standard #871 at 1:1 ratio, as shown in Table 4a.

For capacitors having nominal values of 100 pF and 1000 pF, a two-step process is performed. First, the secondary reference #131 is used to measure the NIST check standards #493 and #517 (or #1717 and #1865) of nominal values of 100 pF (or 1000 pF) at a ratio of 1:1 (or 10:1), as shown in Tables 4b and 4c. Then, the check standards are used as working standards to calibrate simultaneously one, two, or three customer's standards of the identical nominal values at a ratio of 1:1, as shown in Tables 4d, 4e, and 4f, respectively. Likewise, capacitors of nominal values of 1 pF and 10 000 pF can be calibrated by using the 10 pF working standard at 1:10 ratio and the 1000 pF working standard at 10:1 ratio, respectively. Since 1994, the C-Meter has been used to perform additional measurements of customer's nitrogen dielectric capacitors at 1 kHz for a period of several days to observe their stabilities. The average value of the Type-2 bridge and all of the C-Meter measurements is reported.

In the case of large uncertainty (> 25 ppm) calibrations, a simpler measurement procedure is used. After the check standards have been measured, the unknown is compared to a check standard of the same nominal value twice by interchanging their positions in the bridge at the 1:1 ratio, as shown in Table 5. Since 1993, the C-Meter has also been included as part of the large uncertainty calibration at 1 kHz by monitoring the capacitance standards for a period of 30 minutes at five-minute intervals. The average value of these measurements is the reported value and the standard deviation is used to determine the variability of the capacitor.

The C-Meter is also utilized to perform measurements of capacitors subjected to physical tests, if requested. Such tests are performed at 1 kHz and only the changes of capacitance values during the tests are reported.

4.1.3 Air-Dielectric Capacitors

Since the total calibration uncertainties of this type of capacitor are between 100 ppm and 2000 ppm, the measurement procedure given in Table 5 is used for those capacitors of nominal values equal to and greater than 0.1 pF, either at a 1:1 ratio or a 1:10 ratio. For air-dielectric capacitors of lower values (0.01 pF and 0.001 pF), these are calibrated directly against the internal capacitors of the Type-2 bridge by connecting them to the +1 and −1 output taps of the transformer and the detector. The C-Meter is also utilized to measure all air-dielectric capacitors at 1 kHz, in the same manner as in the large uncertainty calibration above.

4.1.4 Two-Terminal Capacitors with HF Coaxial Connectors

Since NIST only provides calibration services on this type of capacitor at a frequency of 1 kHz, the C-Meter is used to perform measurements on all capacitors with HF coaxial connectors, including the terminations.

In order to perform three-terminal measurements on the two-terminal HF coaxial capacitors, a precision adapter was constructed by mounting a GR900 connector to a fixture such that the capacitance value can be defined and measured. Figure 5 illustrates the construction of the NIST

reference adapter used for HF coaxial capacitor measurements. The capacitance of the reference adapter was determined by using another adapter with an inner terminal connected to ground. Measurements were performed by mating the adjustable adapter, which also has a GR900 connector, with the reference adapter in five positions of 0^0, 90^0, 180^0, 270^0, and back to 0^0. The average value of these five measurements is then used as the capacitance value of the reference adapter. Therefore, calibrations of HF two-terminal coaxial standard capacitors are also performed using five measurements by connecting the unknown to the reference adapter, as shown in Fig. 6, in the above five positions. The average value of these measurements is then the capacitance value of the sum of the unknown capacitor and the reference adapter. The capacitance of the unknown can be determined by subtracting the known capacitance value of the reference adapter from the measured value.

4.2 Type-12 Capacitance Measurement System

The Type-12 capacitance bridge is mainly used to measure mica capacitors with banana plugs and binding post connectors in two- or three-terminal configurations from 0.001 μF up to 1 μF. The basic equations of balance for each configuration at various nominal values given below are discussed in detail by Chang [6]. Depending on the terminal connections, measurement procedures are slightly different as described in the following sections.

4.2.1 Two-Terminal Measurements

The two-terminal configuration of mica capacitors is achieved by connecting the low terminal binding post to the ground terminal of the capacitor and removing its ground terminal-plug. Therefore, there are only two terminal-plugs, HIGH and LOW, of the capacitor connected to the bridge, via the HIGH and LOW double insulated binding posts of a metal plate - fixture P2 (see Fig. 7). The HIGH terminal of P2 is connected to the bridge corner "D" and the LOW terminal is connected to the bridge corner "C", via the metal plate and a copper bushing, which is used to mount the plate to the bridge, as shown in Fig. 7. For rigidity, a piece of rectangular Teflon is mounted on top of the plate to support the capacitor being measured, and four Bakelite standoffs are mounted underneath the plate to support the plate on the bridge, also shown in Fig. 7. The procedure for the two-terminal measurements is to balance the bridge twice, once with the unknown capacitor, C_x connected to the arm CD of the Type-12 bridge and once with C_x disconnected entirely, as shown in Fig. 8. The two-terminal capacitor can plug into the bridge directly, via the special fixture P2, without using any cables.

Theoretically, the difference of the balance readings represents the capacitance value of the unknown, given by:

$$C_x = (C_m' - C_{m0}) + (C_r' - C_{r0}) , \qquad (4)$$

where C_m' is the reading of mica dials when C_x is connected to the bridge,
C_{m0} is the reading of mica dials when C_x is disconnected from the bridge,

C_r' is the reading of air dials when C_x is connected to the bridge, and
C_{r0} is the reading of air dials when C_x is disconnected from the bridge.

The relationship of air dials reading, C_r and values of the differential air capacitors C_A was given in Section 3.2, and, according to Eq. (3), $C_r = 2\ C_a$.

During measurements when C_x is not connected to the bridge, the mica dials are always set to zero, i.e. $C_{m0} = 0$. Then Eq. (4) becomes:

$$C_x = C_m' + (C_r' - C_{r0})\ . \qquad (5)$$

For measurements of two-terminal capacitors of nominal values up to 0.005 μF, only air dials are needed to balance the bridge without using the mica dials, i.e. $C_m' = 0$; then Eq. (5) becomes:

$$C_x = (C_r' - C_{r0})\ . \qquad (6)$$

Therefore, Eq. (5) is used to calculate the value of two-terminal capacitors with nominal values larger than 0.005 μF.

4.2.2 Three-Terminal Measurements

The three-terminal configuration for mica dielectric capacitors is to connect the HIGH, LOW, and GROUND terminal-plugs separately to the Type-12 bridge, via the HIGH, LOW, and GROUND binding posts of a brass plate - fixture P3 (see Fig. 9). The HIGH terminal of P3 is connected to the bridge corner "D", the LOW terminal is connected to a switch (S_{AC} in Fig. 2a), which can be selected to connect the LOW terminal to either bridge corner "C" or "A", and the GROUND is connected to the plate. For support, a piece of rectangular brass is constructed underneath the plate. The plate also has internal leads to make the proper connections between the capacitor binding posts and the terminals to be plugged onto the bridge, while a brass bushing is used to mount the fixture to the bridge, also shown in Fig, 9. The procedure for three-terminal measurements is to balance the bridge twice, first by connecting the unknown C_x to the arm CD and then to the arm AD, as shown in Fig. 10. Since this can be accomplished by changing the positions of the bridge switch, S_{AC}, the capacitor being calibrated remains connected to P3 during the measurements.

In order to obtain a balance for unknown capacitors of nominal values higher then 0.005 μF, additional capacitance on the arm CD is required. This is achieved by connecting a capacitance decade box, C_b, to the arm, CD, also shown in Fig. 10. Therefore, C_b is always connected to the bridge in performing three-terminal measurements, and it is set to zero when lower valued capacitors are being measured. For capacitors with nominal values up to 0.5 μF, C_b is set to a fixed value during both balances, using it as a dummy capacitor.

For capacitors of nominal values up to 0.005 μF, only air dials are needed to balance the bridge, as in the two-terminal case. With both the mica dials and the decade box set to zero, the value of the unknown, C_x , can be expressed as:

$$C_x = (1/2)\,(C_{r2} - C_{r1})\,, \tag{7}$$

where C_{r2} is the reading of air dials when C_x is connected to the arm CD of the bridge, and
C_{r1} is the reading of air dials when C_x is connected to the arm AD of the bridge.

For capacitors of nominal values from higher than 0.005 μF to 0.5 μF, a certain setting of the decade box, C_b, is needed for each nominal value, but should remain as a constant during both balances. Also, the mica dials are needed to obtain balance when the unknown is connected to the arm CD. The value of the unknown, C_x, can be expressed as:

$$C_x = (1/2)C_m + (1/4)(C_{r2} - C_{r1})\,, \tag{8}$$

where C_m is the reading of mica dials when C_x is connected to the arm CD of the bridge.

For capacitors of nominal value of higher than 0.5 μF, a different measurement procedure is used. Due to the limitation of internal mica capacitors of the Type-12 bridge, four balances, instead of two, are needed and the decade box C_b is set to either zero or the nominal value of the unknown. Using C_x = 1 μF as an example, the four steps of connections and settings are :

1) Connect C_x to arm AD, set mica dials to zero, and C_b to 1 μF. Use air dials to obtain balance, and record the reading as C_{ra}.

2) Disconnect C_x, and leave C_b at 1 μF. Use both air and mica dials to obtain balance, and record the readings as C_{rb} and C_{mb}, respectively.

3) Connect C_x to arm CD, and set C_b to zero. Use both air and mica dials to obtain balance, and record the readings as C_{rc} and C_{mc}, respectively.

4) Disconnect C_x, set both mica dials and C_b to zero. Use air dials to obtain balance, and record the reading as C_{rd}.

After the above four measurements and data recordings are completed, the value of the unknown, C_x, can be calculated from:

$$C_x = (1/2)\,(C_{mb} + C_{mc}) + (1/2)\,[(C_{rb} - C_{ra}) + (C_{rc} - C_{rd})]\,. \tag{9}$$

Since there are no perfect capacitors, there must be some power loss, which appears as the equivalent parallel conductance of the capacitor. Therefore, the procedure of obtaining a balance condition of the Type-12 bridge is to balance both the quadrature and the in-phase components of the bridge by adjusting both the capacitance and conductance dials, as shown in Fig. 3. Eqs. (5) to (9) are used to calculate unknown capacitances, C_x, of various nominal values and terminal configurations after each balance is obtained and capacitance dial readings are recorded. As shown in Fig. 3, Eqs. (5) to (9) can also be utilized to calculate the conductance value of the unknown capacitor by substituting the C_x and capacitance dial readings with G_x and conductance dial readings, respectively.

5. QUALITY CONTROL IN THE IMPEDANCE CALIBRATION LABORATORY

In order to achieve high quality in the measurement results, it is important to establish procedures to assure that the measuring systems and reference and check standards are in a state of statistical control. In the ICL, the unit of capacitance is transferred from the PSL, and maintained via primary reference standards to perform calibrations of customer's standards. Quality control procedures have been established in many parts of the calibration process, including maintaining the farad, developing control charts of reference and check standards, observing the variations in measurements, and examining the calibration data history of the customer's standard.

5.1. Transfer and Maintenance of the Farad

The primary reference of the ICL is a group of four NIST-made, 10 pF oil-bath type, fused-silica-dielectric capacitors, which are maintained in an oil bath at a temperature of 25 °C and are traceable to the calculable capacitor via another NIST-made, 10 pF air-bath type, fused-silica capacitor used as the transfer standard. Each of the reference standards, including the transfer standard, has a known temperature coefficient at its reference temperature, which is measured in terms of a resistive temperature sensor. Therefore, besides the capacitance value, it is necessary to measure the resistance of the copper wire wrapped around the individual capacitor, to determine the temperature of the capacitor during measurements. Thus, a temperature correction that corresponds to the measured deviation from the reference temperature (or reference resistance value) can be applied to the reference capacitance value when performing calibrations.

The above procedure for maintaining the farad has been developed and used in the ICL since 1993. According to the data history, all of the primary references are stable to within 0.02 ppm/year with an average drift for the group of less than 0.005 ppm/year. Figure 11 is a plot of the average value of the four primary reference standards in the oil bath of the ICL corrected to their respective reference temperatures.

The transfer standard is normally situated in the PSL and measured, against a bank of reference standards in the PSL, weekly to monitor the stability of the transfer standard. It is brought to the ICL to transfer its value to the primary references in the oil bath of the ICL every two to three months. Figure 12 is a block diagram illustrating the procedure used to maintain the farad obtained from the PSL and transfer it to the customer workload.

In the ICL, the primary references are used to calibrate customer's fused-silica-dielectric capacitors and to measure ICL's secondary reference standards, which are two commercial temperature-controlled air-bath type, fused-silica capacitance standards, one 10 pF and one 100 pF. The exact temperature coefficients of these standards are unknown, but the temperature variations of each enclosure during measurement periods of two weeks are within 0.004 °C, with a drift rate of less than 0.002 °C/year. Since 1988, a data history of each secondary reference has been maintained by staff in the ICL with control charts to observe their stabilities. Figures 13 and 14 are examples of the histories of secondary reference standards #102 and #131 (with control limits at the 95 percent

confidence level) and enclosure temperatures, dating from 1990. These secondary references are utilized to calibrate the check standards which are used as working standards to calibrate customer's capacitance standards with dielectrics other than fused-silica, such as nitrogen, air, and mica, also shown in Fig. 12.

5.2 Type-2 System and Capacitance Meter

The ICL staff also maintain control charts for each check standard given in Table 2 to assure that both the Type-2 system and the check standards are in statistical control. After the check standards have been measured against the secondary reference, the data are examined to ensure that they are within control limits. Then the check standards are used as the working standards to calibrate customer's capacitors, as indicated in Fig. 12. Figure 15 is an example illustrating the data history and control limits of one of the check standards of the Type-2 bridge.

The C-Meter is characterized by using the check standards of the Type-2 system to observe its stability and to determine measurement differences from the Type-2 bridge. Results from several years of collecting data depict that the differences in measurements between using the Type-2 bridge and the C-Meter to measure all reference and check standards are within ±0.4 ppm at the 100 pF and 1000 pF levels and ±0.7 ppm at the 10 pF level. Figure 16 is an example showing the data from measurements performed by both systems on the same check standard (#1865, shown in Fig. 15). Since 1993, the C-Meter is also used to measure customer's nitrogen-dielectric capacitors on the same date when the capacitors are being calibrated using the Type-2 bridge. Figures 17a, 17b, and 17c are plots of the measurement differences of customer's capacitors between using the C-Meter and the Type-2 bridge in the 1000 pF, 100 pF, and 10 pF levels, respectively. Therefore, the C-Meter has been utilized to perform calibrations on capacitors with an uncertainty higher than 25 ppm at a frequency of 1 kHz. Together with the Type-2 bridge, it is also used for lower uncertainty calibrations to monitor the customer's nitrogen-dielectric capacitors at 1 kHz for a period of several days to ensure that the measured variations of the capacitors are within the assigned limits. If the difference of measurements between using the C- Meter and the Type-2 bridge on the same day is within ±0.4 ppm for the 100 pF and 1000 pF levels and within ±0.7 ppm for the 10 pF level, the average of all measurements are reported. The measurement differences are taken into account for the calibration uncertainties assigned.

5.3 Type-12 System, Capacitance Meter, and Digital Impedance Meter

The Type-12 bridge uses its internal capacitors as the reference in performing measurements. Thus, the ICL staff maintain a database with control charts of two sets of check standards, which are mica capacitors of nominal values from 0.001 μF to 1 μF, to assure that the Type-12 system is in a state of statistical control. Table 6 is a list of NIST check standards of the Type-12 system. Figure 18 is an example illustrating the data and control limits of one of the check standards (#27620).

Since 1993, both the C-Meter and the DIM have been characterized at 1 kHz using the check standards of the Type-12 bridge to observe their stabilities and measurement differences from the

Type-12 bridge. Data obtained from these measurements show that the differences in measurements among these three systems vary in accordance to the nominal values of the capacitors. Figure 19 is an example illustrating the data from measurements using all three systems. Both the C-Meter and the DIM are utilized to perform calibrations on mica capacitors at 1 kHz by using the "substitution method" [12], and the average of the calculated values from both meters is used in the NIST calibration reports. The range of these two measurements is used to observe the variation in measurements to check the measurement uncertainty.

5.4 Customer's Standards

As mentioned previously, standard capacitors received by NIST must be in good working condition, and the calibration process begins after these are in the ICL for more than 72 hours. After the calibration process is completed, the final value is compared with the data history of the customer's standard to determine if any inconsistencies occurred. In the case where the standard has not been calibrated by NIST previously, two separate calibrations are performed on the standard at an interval of several days to check for consistency. The average value of these two measurements is reported.

6. REPORTED VALUE AND MEASUREMENT UNCERTAINTY

The capacitance value along with its uncertainty is stated on the calibration report issued by NIST. The reported values are determined as discussed in Section 3. General information relevant to the capacitance measurement is given in the Appendix, which also contains a few Report of Calibration examples.

The uncertainty given in the Report of Calibration is the expanded uncertainty, U, of the assigned value, and expressed as :

$$U = k\, u_c, \qquad (10)$$

where u_c is the combined standard uncertainty and k is the coverage factor to be chosen on the basis of the approximate confidence level desired. The coverage factor used at NIST to calculate U is generally $k = 2$, which is consistent with current international practice [5,15] and having a level of confidence of approximately 95 percent.

The combined standard uncertainty, u_c, is the combination of estimated values of two types of uncertainties, the Type A and Type B standard uncertainties, and is defined as the "RSS" (root-sum-of-squares) of both types as :

$$u_c = [u_a^{\,2} + u_b^{\,2}]^{1/2}, \qquad (11)$$

where u_a and u_b are Type A and Type B standard uncertainties, respectively.

The Type A standard uncertainty contains error components that can be evaluated by statistical methods and is expressed from each known source of error as a statistical standard deviation. The Type B standard uncertainty contains those errors that are evaluated by other means [5], and is estimated from an "equivalent" standard deviation of each possible source of error, many times based solely on the experience of the metrologist.

A detailed discussion is contained in [6] for each type of uncertainty for the measurement of various standard capacitors using different measurement systems. The expanded uncertainties assigned to these capacitors are given in Tables 7 to 10, based on the following equation:

$$U = 2\,[\,\Sigma(s_i)^2 + \Sigma(s_j)^2\,]^{1/2}\,, \qquad (12)$$

where s_i and s_j are the estimated standard deviations of the components of Type A and Type B standard uncertainties, respectively.

7. CONCLUSION

The NIST capacitance calibration service is described in this publication, which contains material from internal documents dated back to 1960. Over the past decade, the quality of the measurements performed in the impedance calibration laboratory (ICL) has been improved tremendously. High-quality commercial instruments, such as detectors and function generators, are now used in the Type-2 system to improve its resolution. The use of oil-bath type fused-silica capacitors with known temperature corrections as reference standards in the ICL has increased the stability and consistency of the local unit of capacitance. The development of automatic measurement procedures using characterized commercial meters reduces measurement time and the possibility for human errors. References [3] and [6] constitute additional, more detailed documentation for selected aspects of the NIST capacitance calibration service.

8. REFERENCES

1. J. Q. Shields, R. F. Dziuba, and H. P. Layer, "New Realization of the Ohm and Farad Using the NBS Calculable Capacitor," IEEE Trans. Instrum. Meas. Vol. 38, No. 2, pp. 249-251, April 1989.

2. R. D. Cutkosky, "Capacitance Bridge -- NBS Type 2, "National Bureau of Standards Report 7103, March 1961.

3. Y. M. Chang, "NIST Measurement Assurance Program for Capacitance Standards at 1 kHz," NIST Technical Note 1417, March 1996.

4. "NIST Calibration Services Users Guide," Natl. Inst. Stand. Tech. Special Publication 250, 1991 edition, U. S. Government Printing Office, Washington, DC 20402.

5. B. N. Taylor and C. E. Kuyatt, "Guidelines for Evaluating and Expressing the Uncertainty of NIST Measurement Results," NIST Technical Note 1297, 1994 Ed., September 1994.

6. Y. M. Chang, "Error Analysis and Calibration Uncertainty of Capacitance Standards at NIST," NIST Technical Note (to be published)

7. C. R. Levy, "Testing to Quantify the Effects of Handling of Gas Dielectric Standard Capacitors," NBS Technical Note 1161, October 1982.

8. M. C McGregor, J. F. Hersh, R. D. Cutkosky, F. K. Harris, and F. R. Kotter, "New Apparatus at the National Bureau of Standards for Absolute Capacitance Measurement," IRE Trans. Instrum. vol I-7, nos. 3 & 4, pp. 253-261, December 1958.

9. W. D. Voelker, "An Improved Capacitance Bridge for Precision Measurements," Bell Labs Record, vol. 20, pp. 133-137, January 1942.

10. H. T. Wilhelm, "The Type-12 Capacitance Bridge," Bell Labs Memorandum, MM 70-4735-9, Case 70052-213, File 37954-15, May 1970.

11. Y. M. Chang, "NIST Capacitance Measurement Assurance Program (MAP)," Measurement Science Conference, Anaheim, CA, January 1993.

12. Y. M. Chang and S. B. Tillett, "Calibration Procedures for Inductance Standards Using a Commercial Impedance Meter as a Comparator," NISTIR 4466, November 1990.

13. J. M. Cameron, "The Use of the Method of Least Squares in Calibration," NBSIR 74-587, September 1974.

14. W. G. Eicke and J. M. Cameron, "Designs for Surveillance of the Volt Maintained by a Small Group of Saturated Standard Cells," NBS Technical Note 430, October 1967.

15. International Bureau of Weights and Measures (BIPM) Working Group on the Statement of Uncertainties, Metrologia, vol. 17, pp. 73-74, 1981.

Table 1. Summary of Standard Capacitors Acceptable for Calibrations

Manufacturer and Model	Norminal Values	Terminal Configuration	Frequency (Hz)
General Radio Co.*			
GR1403	0.001 pF to 1000 pF	3-T Coaxial	100 400 & 1000
GR1404	10 pF to 1000 pF	3-T Coaxial	100 400 & 1000
GR1405	1 pF to 20 pF	2-T Coaxial	1000
GR1406	50 pF to 1000 pF	2-T Coaxial	1000
GR1407	0.001 μF to 0.1 μF	2-T Coaxial	1000
GR1408	10 pF and 100 pF	3-T Coaxial	100 400 & 1000
GR1409	0.001 μF to 1 μF	2-T & 3-T Binding Post	66 100 400 1000 & 10 000
GR509	0.001 μF to 1 μF	2-T Binding Post	66 100 400 1000 & 10 000
GR1615-P1	10 000 pF	3-T Coaxial	1000
GR900-WO	0.172 pF (open-circuit termination)	2-T HF Coaxial	1000
GR900-WO4	2.67 pF (open-circuit termination)	2-T HF Coaxial	1000
Electro-Scientific Industries Inc.			
ESI SC1000	1000 pF	3-T Coaxial	100 400 & 1000
Andeen-Hagerling Inc.			
AH11A	1 pF to 100 pF	3-T BNC	100 400 & 1000

* or one of its successor companies.

Table 2. Summary of Reference and Check Standards of the Type-2 Bridge

	Serial No.	Values (pF)	Dielectric	Control	Temperature (°C)
Primary Reference	#121	10	Fused-Silica	Oil-Bath	25
	#181	10			
	#183	10			
	#184	10			
Secondary Reference	#102	10	Fused-Silica	Air-Bath	30
	#131	100			
	#254	10			
	#230	100			
Check Standards	#89790	1	Nitrogen	Stable Laboratory Environment	23
	#871	10			
	#493	100			
	#517	100			
	#1717	1000			
	#1865	1000			
	#202201	10 000			
	#NBS1615	10 000	Air		

Table 3. NIST Calibration Design for Fused-Silica-Dielectric Standard Capacitors

Standards Used	Primary Reference	Secondary Reference		Customer's Capacitors (GR-1408 and AH11A)		
Serial No.	#121	#102	#131	C_{X01}	C_{X11}	C_{X21}
Nominal Value	10 pF	10 pF	100 pF	1 pF	10 pF	100 pF
Group A	+0.1	-0.1				
	+0.1			-1		
		+0.1		-1		
	-0.1	+0.1				
	-0.1			+1		
		-0.1		+1		
Group B	+1	-1				
	+1				-1	
		+1			-1	
	-1	+1				
	-1				+1	
		-1			+1	
Group C	+1		-0.1			
	+1					-0.1
			+0.1			-0.1
	-1		+0.1			
	-1					+0.1
			-0.1			+0.1

Table 4a. NIST Calibration Design for 10 pF Nitrogen-Dielectric Standard Capacitors

Standards Used	Secondary Reference	Check Standard (GR-1404 without trimmers)	Customer's Capacitor (GR-1404)
Serial No.	#102	#871	C_{X12}
Nominal Value	10 pF	10 pF	10 pF
Group D	+1	-1	
	+1		-1
		+1	-1
	-1	+1	
	-1		+1
		-1	+1

Table 4b. NIST Calibration Design for 100 pF Nitrogen-Dielectric Check Standards

Standards Used	Secondary Reference	Check Standard (GR-1404 without trimmers)	Check Standard (GR-1404 without trimmers)
Serial No.	#131	#493	#517
Nominal Value	100 pF	100 pF	100 pF
Group E	+1	-1	
	+1		-1
		+1	-1
	-1	+1	
	-1		+1
		-1	+1

Table 4c. NIST Calibration Design for 1000 pF Nitrogen-Dielectric Check Standards

Standards Used	Secondary Reference	Check Standard (GR-1404 without trimmers)	Check Standard (GR-1404 without trimmers)
Serial No.	#131	#1717	#1865
Nominal Value	100 pF	1000 pF	1000 pF
Group F	+1	-0.1	
	+1		-0.1
		+0.1	-0.1
	-1	+0.1	
	-1		+0.1
		-0.1	+0.1

Table 4d. NIST Calibration Design for One 100 pF (or 1000 pF) Nitrogen-Dielectric Standard Capacitor

Standards Used	Working Standards (GR-1404 without trimmers)		One Customer's Capacitor (GR-1404 & ESI SC-1000)
Serial No.	#493 (or #1717)	# 517 (or #1865)	C_{X22} (or C_{X31})
Nominal Value	100 (or 1000) pF	100 (or 1000) pF	100 (or 1000) pF
Group of 3 Standards		+1	-1
	-1	+1	
	-1		+1
		-1	+1
	+1	-1	
	+1		-1

Table 4e. NIST Calibration Design for Two 100 pF (or 1000 pF) Nitrogen-Dielectric Standard Capacitors

Standards Used	Working Standards (GR-1404 without trimmers)		Two Customer's Capacitors (GR-1404 & ESI SC-1000)	
Serial No.	#493 (or #1717)	# 517 (or #1865)	C_{X22} (or C_{X31})	C_{X23} (or C_{X32})
Nominal Value	100 (or 1000) pF	100 (or 1000) pF	100 (or 1000) pF	100 (or 1000) pF
Group of 4 Standards	+1		-1	
	+1	-1		
		-1	+1	
			+1	-1
		+1		-1
	-1	+1		
	-1			+1
			-1	+1

Table 4f. NIST Calibration Design for Three 100 pF (or 1000 pF) Nitrogen-Dielectric Standard Capacitor

Standards Used	Working Standards (GR-1404 without trimmers)		Three Customer's Capacitors (GR-1404 & ESI SC-1000)		
Serial No.	#493 (or #1717)	# 517 (or #1865)	C_{X22} (or C_{X31})	C_{X23} (or C_{X32})	C_{X24} (or C_{X33})
Nominal Value	100 (or 1000) pF	100 (or 1000) pF	100 (or 1000) pF	100 (or 1000) pF	100 (or 1000) pF
Group of 5 Standards	+1		-1		
	+1				-1
				+1	-1
	-1			+1	
	-1	+1			
		+1		-1	
			+1	-1	
		-1	+1		
		-1			+1
			-1		+1

Table 5. NIST Large Uncertainty Calibration Design for Nitrogen- and Air-Dielectric Standard Capacitors

Standards Used	Working Standards	Customer's Capacitors	Working Standard	Customer's Capacitor
Nominal Value	1 pF to 10 000 pF	1 pF to 10 000 pF	1 pF	0.1 pF
Ratio	1 : 1		1 : 10	
	+1 -1	-1 +1	+0.1 -0.1	-1 +1

Table 6. Summary of Check Standards of the Type-12 Bridge

Serial No.		Nominal Value (μF)	Model GR1409 Type
Primary Set	Secondary Set		
#3068	#1812	0.001	F
#547	#11741	0.002	G
#496	#11758	0.005	K
#27620	#10541	0.01	L
#1509	#11180	0.02	M
#3687	#11525	0.05	R
#5149	#12223	0.1	T
#7632	#5248	0.2	U
#3938	#3858	0.5	X
#4214	#3390	1	Y

Table 7. Calibration Uncertainties of Fused-Silica- and Nitrogen-Dielectric Standard Capacitors

Expanded Uncertainties (ppm)							
Dielectric Type	Fused-Silica			Nitrogen			
Test Type				Small Uncertainty			Large Uncertainty
Frequency (Hz)	100	400	1000	100	400	1000	100, 400, & 1000
Nominal Value (pF)							
1	8.5	4.5	3.8				
10	4	2.5	1.7	6	5	4	25
100	4	2.5	1.7	6	5	4	25
1000				6	5	4	25

Table 8. Calibration Uncertainties of Air-Dielectric and Two-Terminal HF Coaxial Connector Standard Capacitors

Expanded Uncertainties (ppm)				
Configuration	Three-Terminal Coaxial		Two-Terminal HF Coaxial	
Dielectric Type	Air		Air and Mica	
Frequency (Hz)	100	400 & 1000	Frequency (Hz)	1000
Nominal Value (pF)			Nominal Value (pF)	
0.001		2000	1	840
0.01	1500	200	2	420
0.1	230	100	5	200
1 to 1000	100	100	10	100
10 000		150	20	75
			50 to 1000	60
			5000 to 10 000	65
			(Open-Circuit Terminations)	
			0.172	1000
			2.67	450

Table 9. Calibration Uncertainties of Capacitance Values of Two- and Three-Terminal Mica-Dielectric Standard Capacitors

Expanded Uncertainties of Capacitance (ppm)				
Configuration	Two-Terminal		Three-Terminal	
Frequency (Hz)	66, 100, 400, and 1000	10 000	66, 100, 400, and 1000	10 000
Nominal Value (μF)				
0.001	180	180	120	120
0.002	120	120	100	100
0.005	120	120	100	100
0.01	120	120	100	100
0.02	120	120	100	100
0.05	120	120	100	120
0.1	120	150	100	150
0.2	120	250	100	250
0.5	120	500	100	500
1	120	1000	120	NA

Table 10. Calibration Uncertainties of Conductance Values of Two- and Three-Terminal Mica-Dielectric Standard Capacitors

Expanded Uncertainties of Conductance (μS)			
Frequency (Hz)	66 & 100	400 & 1000	10 000
Nominal Value (μF)			
0.001	0.0003	0.0005	0.001
0.002	0.0003	0.0007	0.002
0.005	0.0003	0.0007	0.005
0.01	0.0004	0.0009	0.01
0.02	0.0005	0.003	0.02
0.05	0.0009	0.005	0.1
0.1	0.002	0.015	0.2
0.2	0.005	0.04	0.7
0.5	0.008	0.13	5
1	0.02	0.3	15 (two-terminal only)

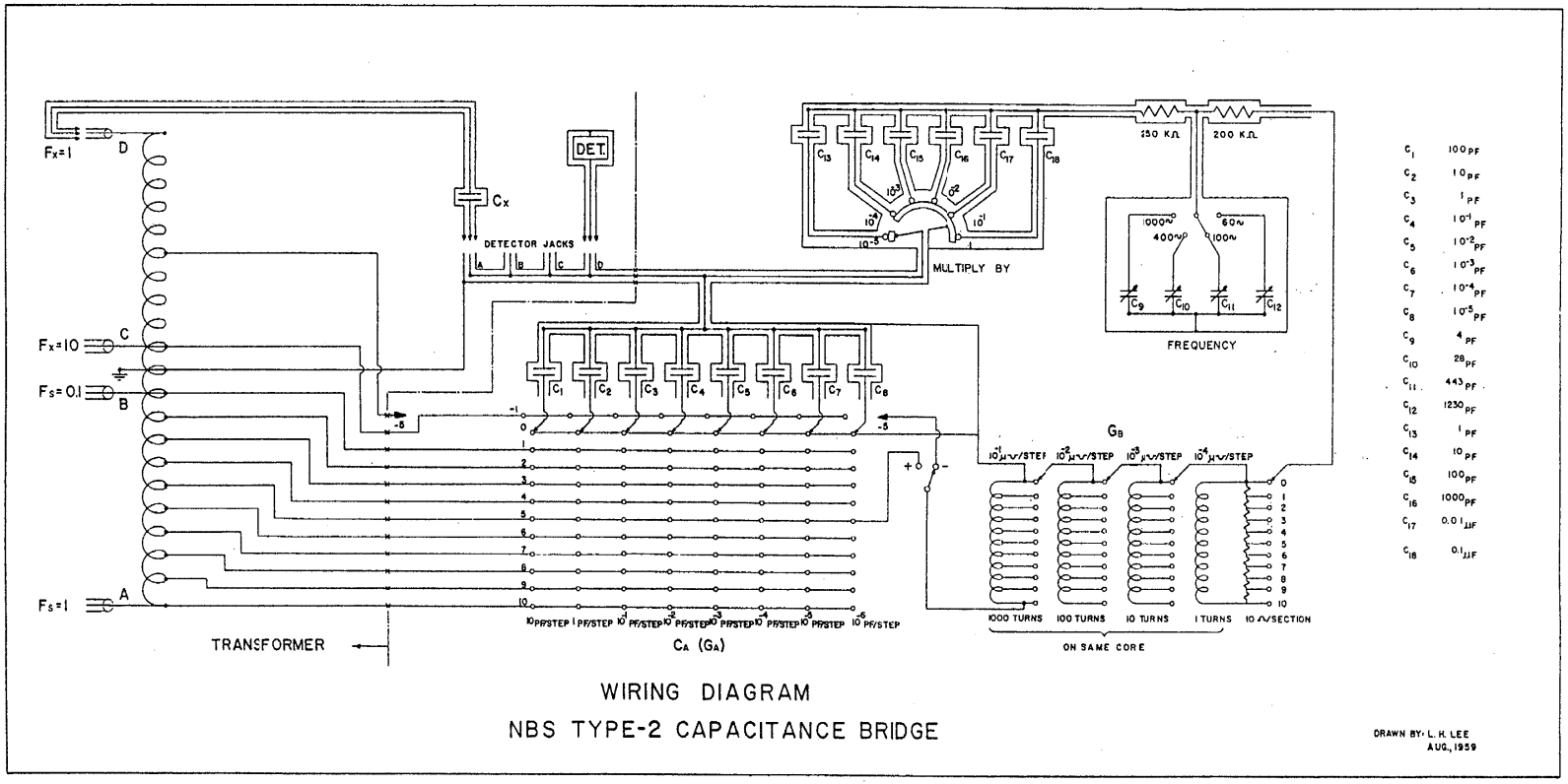

Figure 1a. Schematic Diagram of the NIST Type-2 Capacitance Bridge.

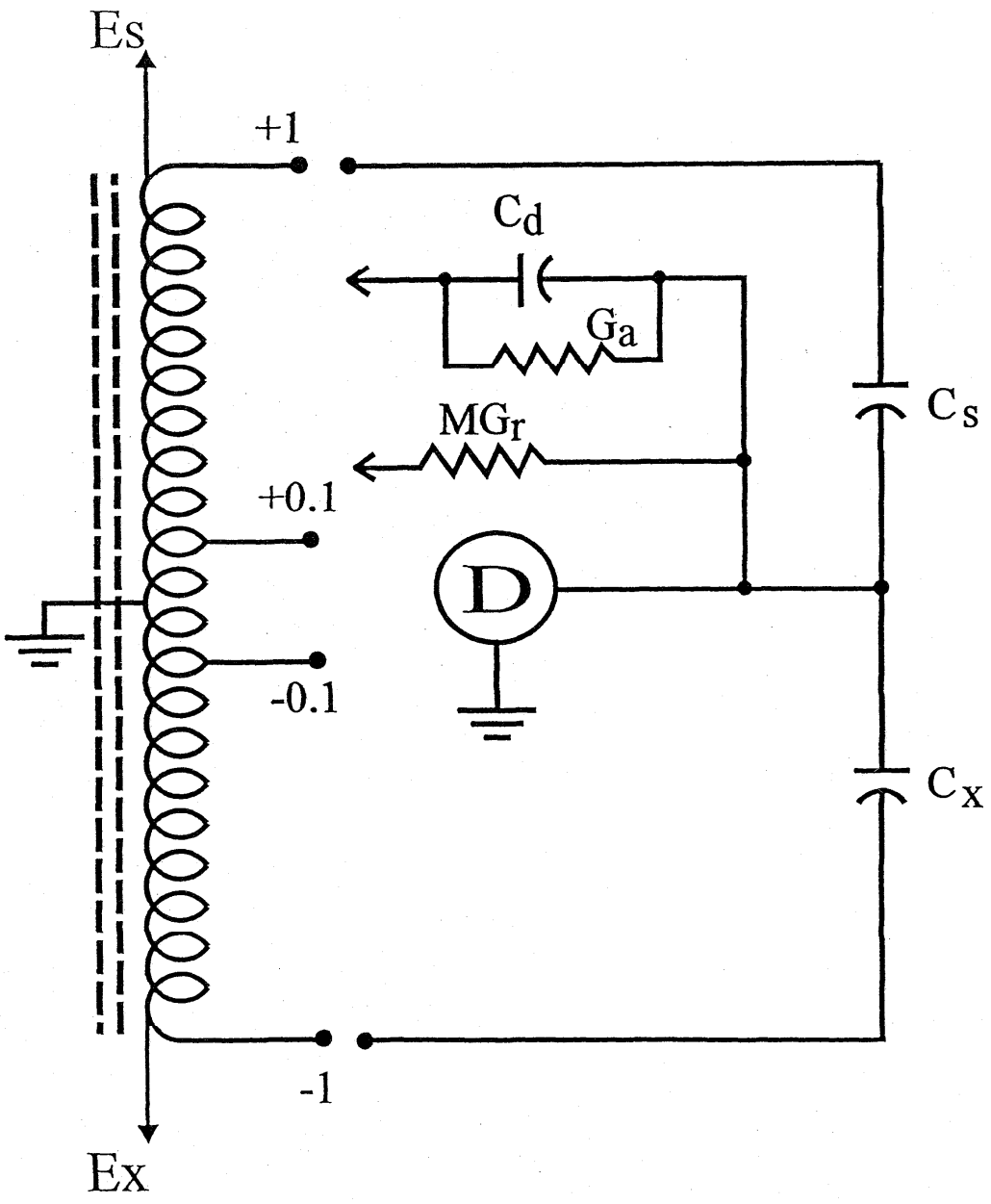

Figure 1b. Simplified Circuit Diagram of the NIST Type-2 Capacitance Bridge.

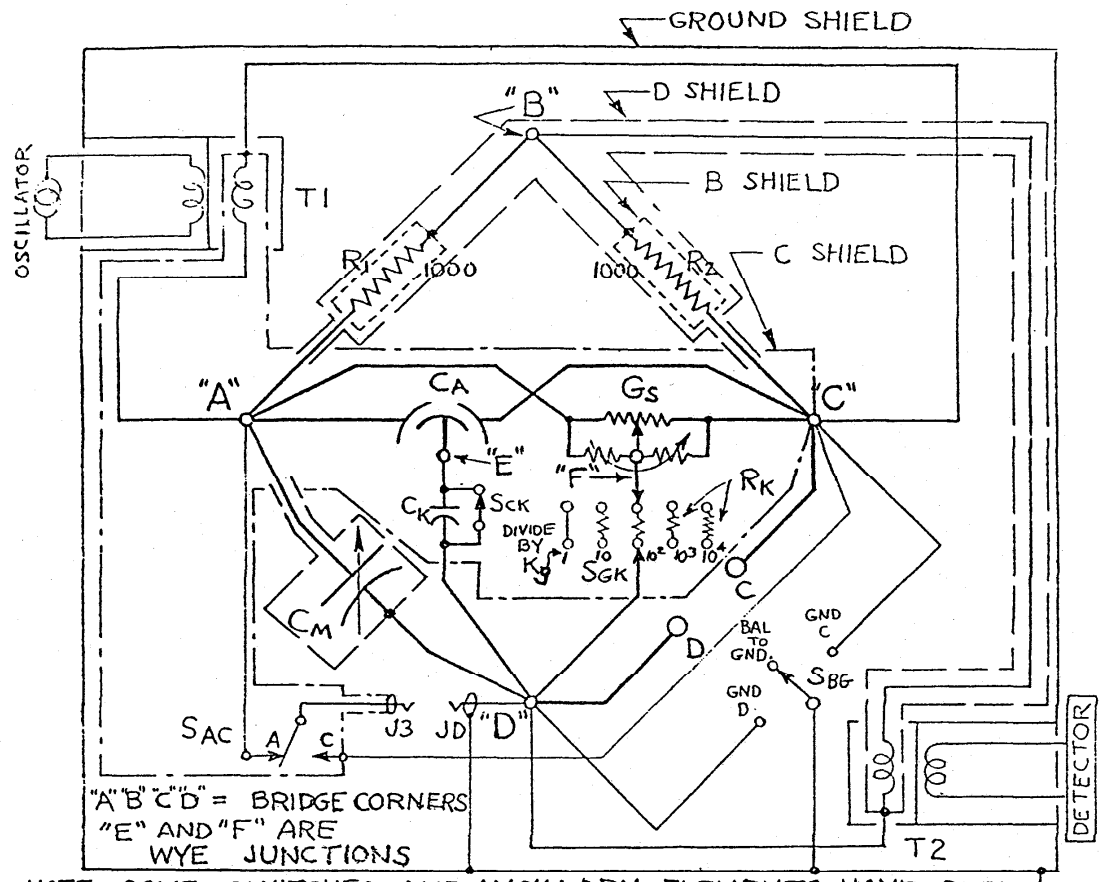

NOTE: SOME SWITCHES AND ANCILLARY ELEMENTS HAVE BEEN OMITTED TO SIMPLIFY THIS SCHEMATIC DIAGRAM.

C_A: AIR CAPACITOR 10×(1000, 100, 10) PF + 10 PF DIFFERENTIAL CONTINUOUS.
C_K: DIVIDE-BY-TEN CAPACITOR: 600 PF OR 100 PF (SER. NOS. ABOVE 1,100,000)

C_M: MICA CAPACITANCE STD 10×(0.1, 0.01) UF

G_S: CONDUCTANCE STANDARD: 10×(100,10) UMHO + 1-11 UMHO
R_K: CONDUCTANCE DIVIDER RESISTORS: 0, 1800, 19800 Ω; 0.1998 & 2 MEGS. (DIVIDE G_S BY 1, 10, 10^2, 10^3, 10^4)
R1, R2: 1000-OHM RATIO ARMS
S_{AC}: DIRECT CAPACITANCE A-OR-C SWITCH
S_{GK}: CONDUCTANCE DIVIDER SWITCH S_{CK}: CAPACITANCE DIVIDER SWITCH
S_{BG}: BALANCE OR GROUND SWITCH

T1, T2: D-179632 20 Hz - 200 kHz DOUBLE-SHIELDED TRANSFORMERS (D-158490 200 Hz - 200 kHz IN BRIDGES BEFORE W-10105-6)

C, D: TEST TERMINALS.

J3, JD: DIRECT CAPACITANCE TEST JACKS.

ISS. 5 1/23/69 HTW

ISSUE	ENGR	TITLE	BELL TELEPHONE LABORATORIES INCORPORATED	
1 9/15/67 HTW 2 10/26/67 HTW 3 2/20/68 HTW 4 3/21/68 HTW	HTW DRAWN HTW	NO. 12-TYPE CAPACITANCE BRIDGE SIMPLIFIED SCHEMATIC	B-145 498 NO. OF SHEETS PER SET —	SHEET —

Figure 2a. Schematic Diagram of the NIST Type-12 Capacitance Bridge.

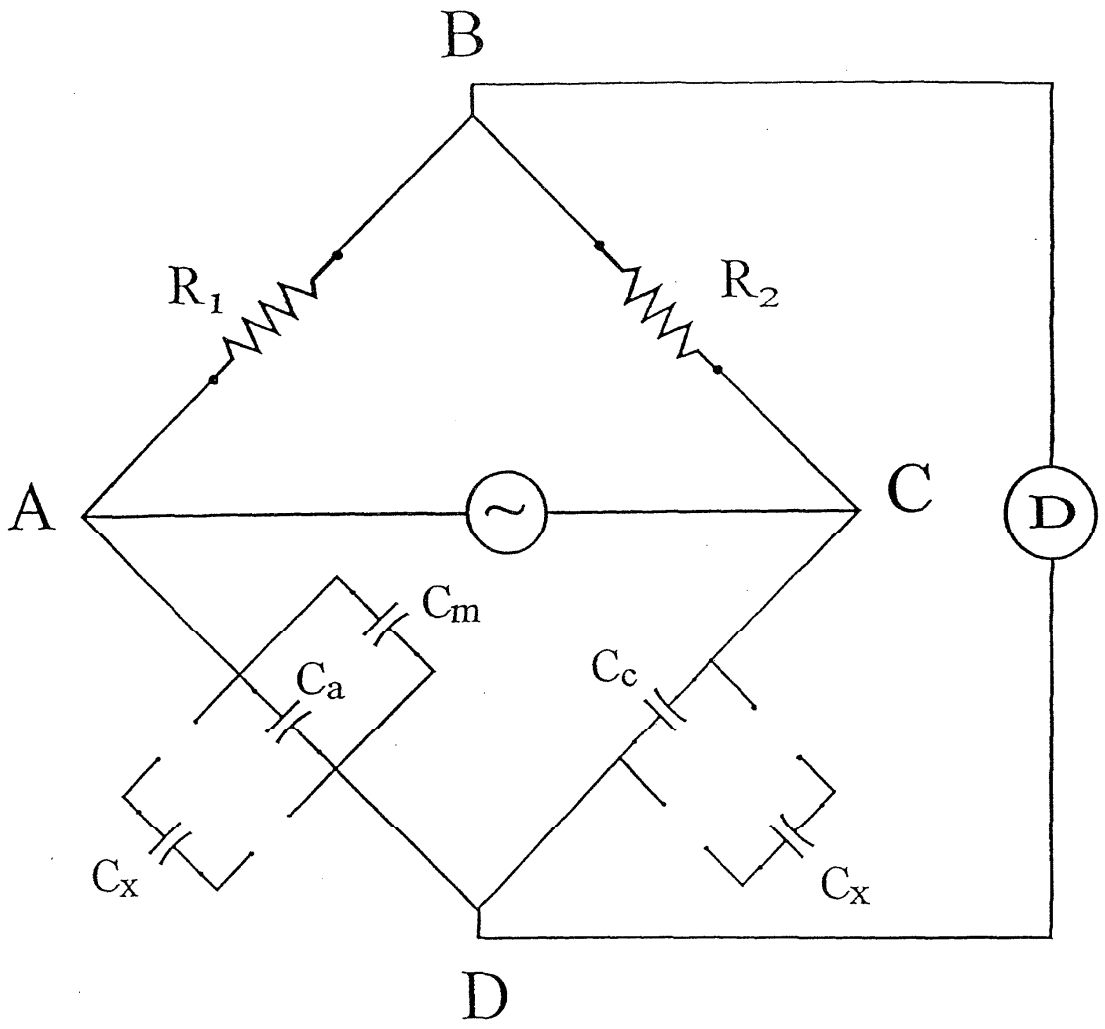

Figure 2b. Simplified Circuit Diagram of the NIST Type-12 Capacitance Bridge.
(Generally Showing only the Capacitance Components)

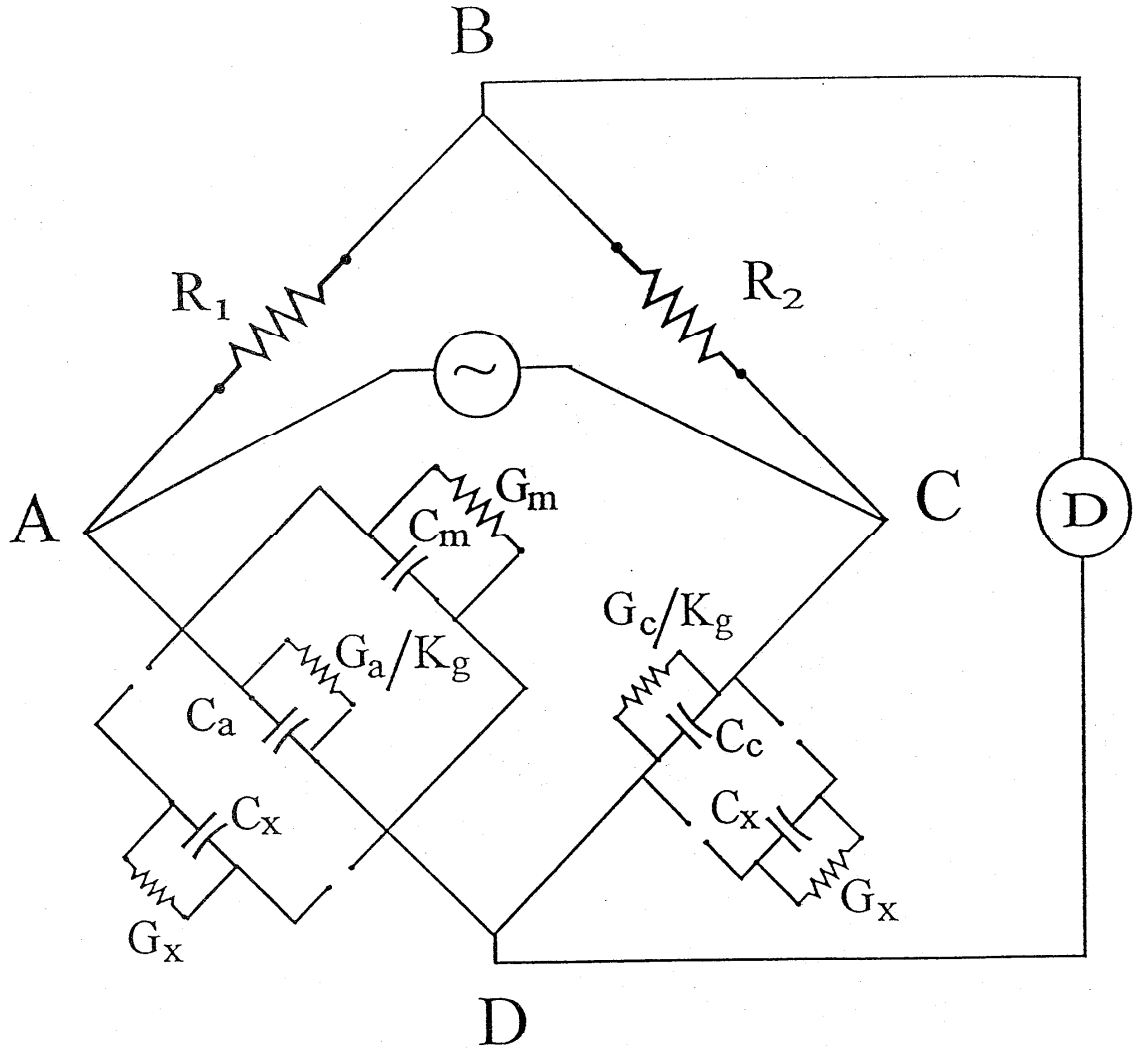

Figure 3. The NIST Type-12 Capacitance Bridge with Conductance Components.

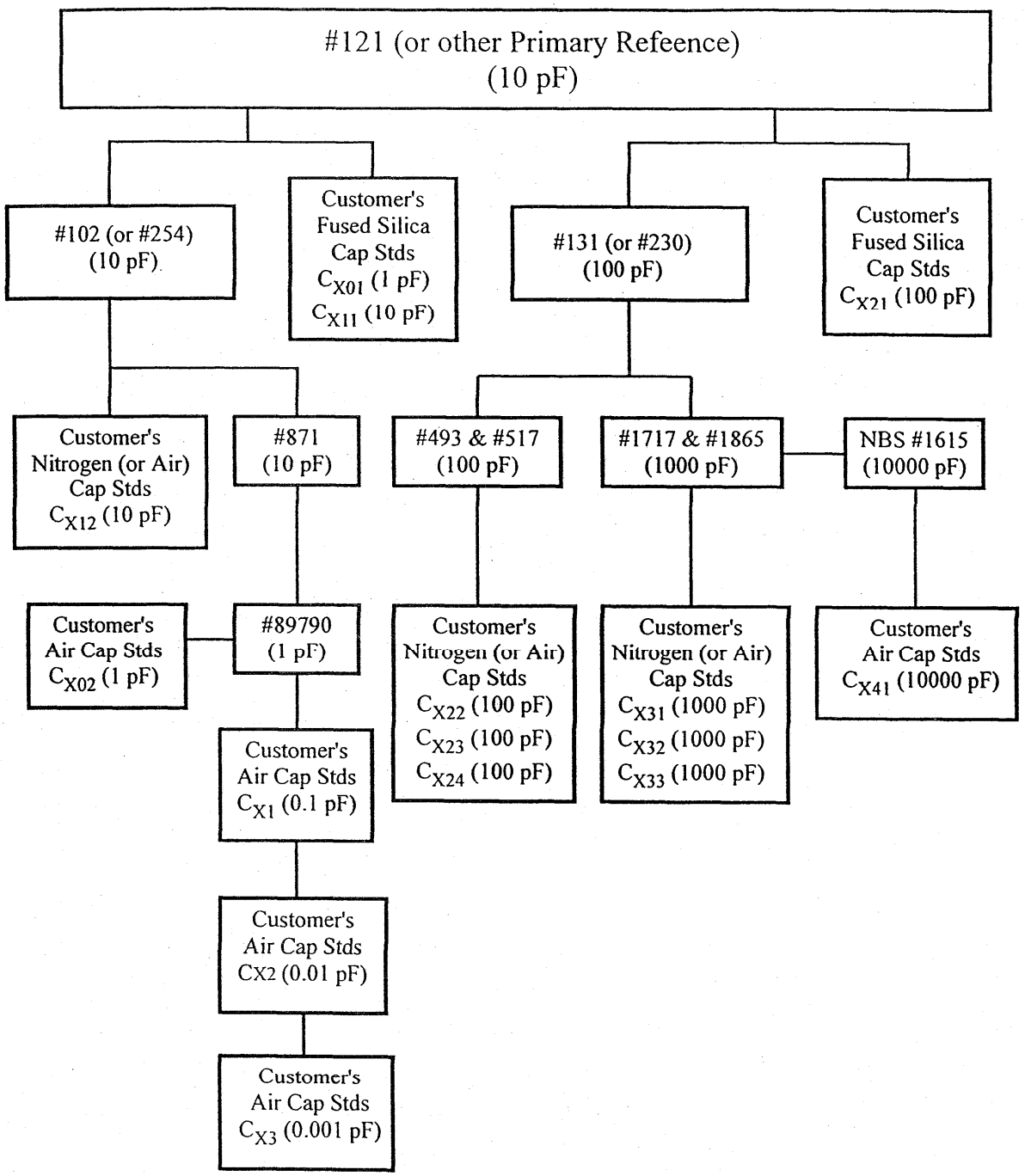

Figure 4. Block Diagram of Measurement Process and Standards being Used In the Impedance Calibration Laboratory.

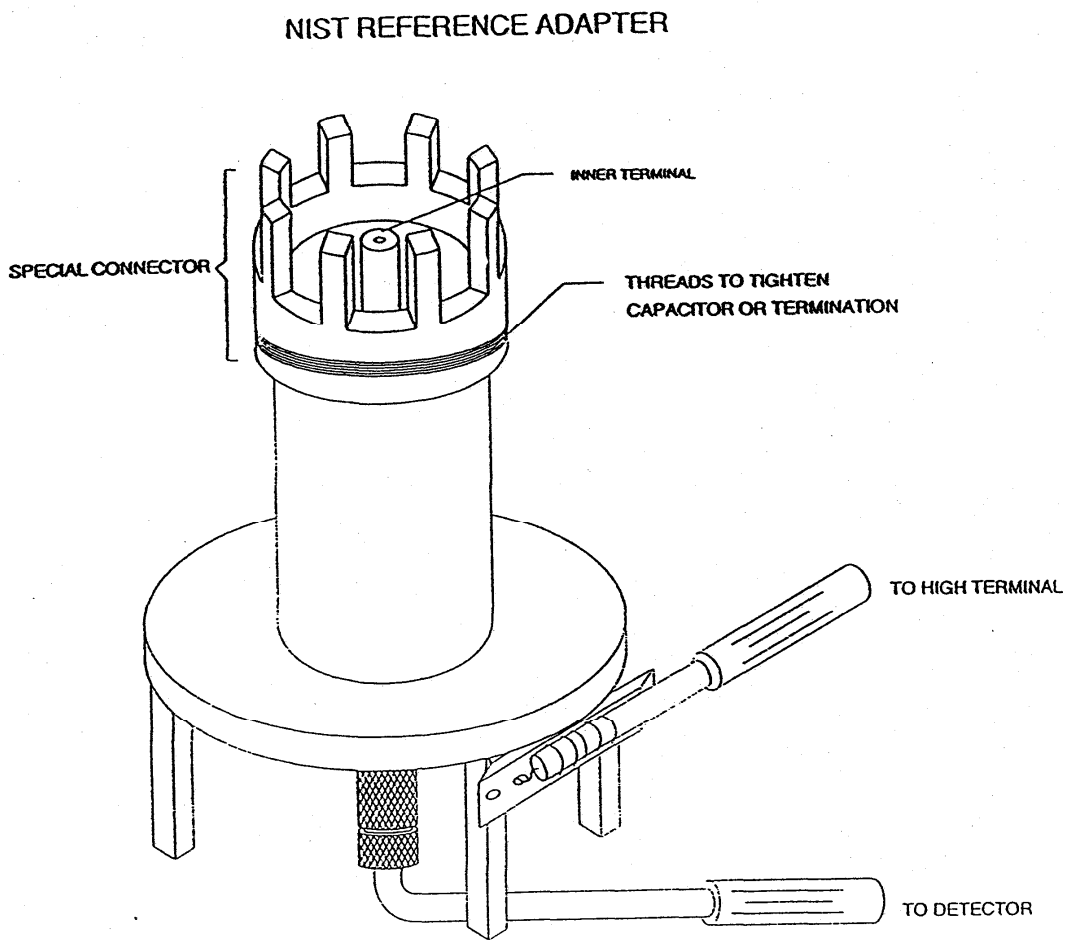

Figure 5. NIST Reference Adapter for Two-Terminal HF Coaxial Connector Capacitors.

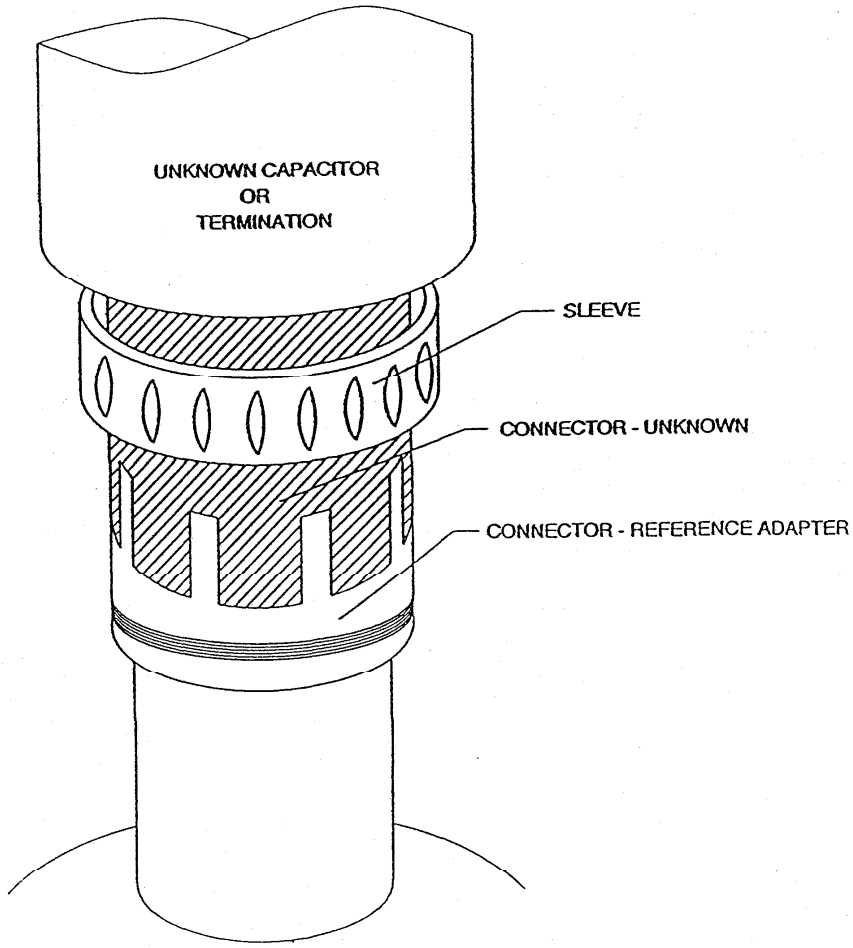

Figure 6. Connection of Reference Adapter and HF Coaxial Connector Capacitors

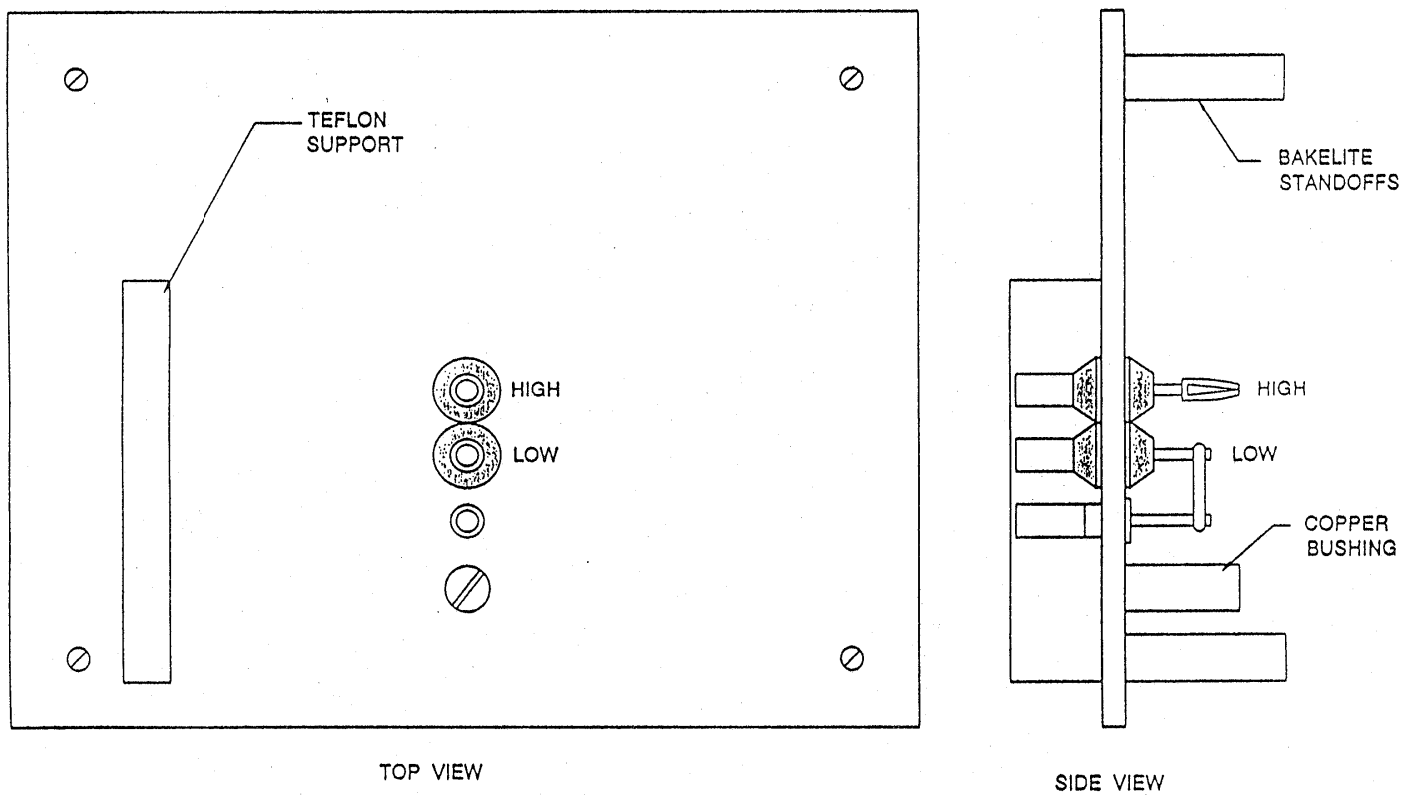

Figure 7. Fixture (P2) Used with the Type-12 Bridge for Two-Terminal Capacitance Measurements.

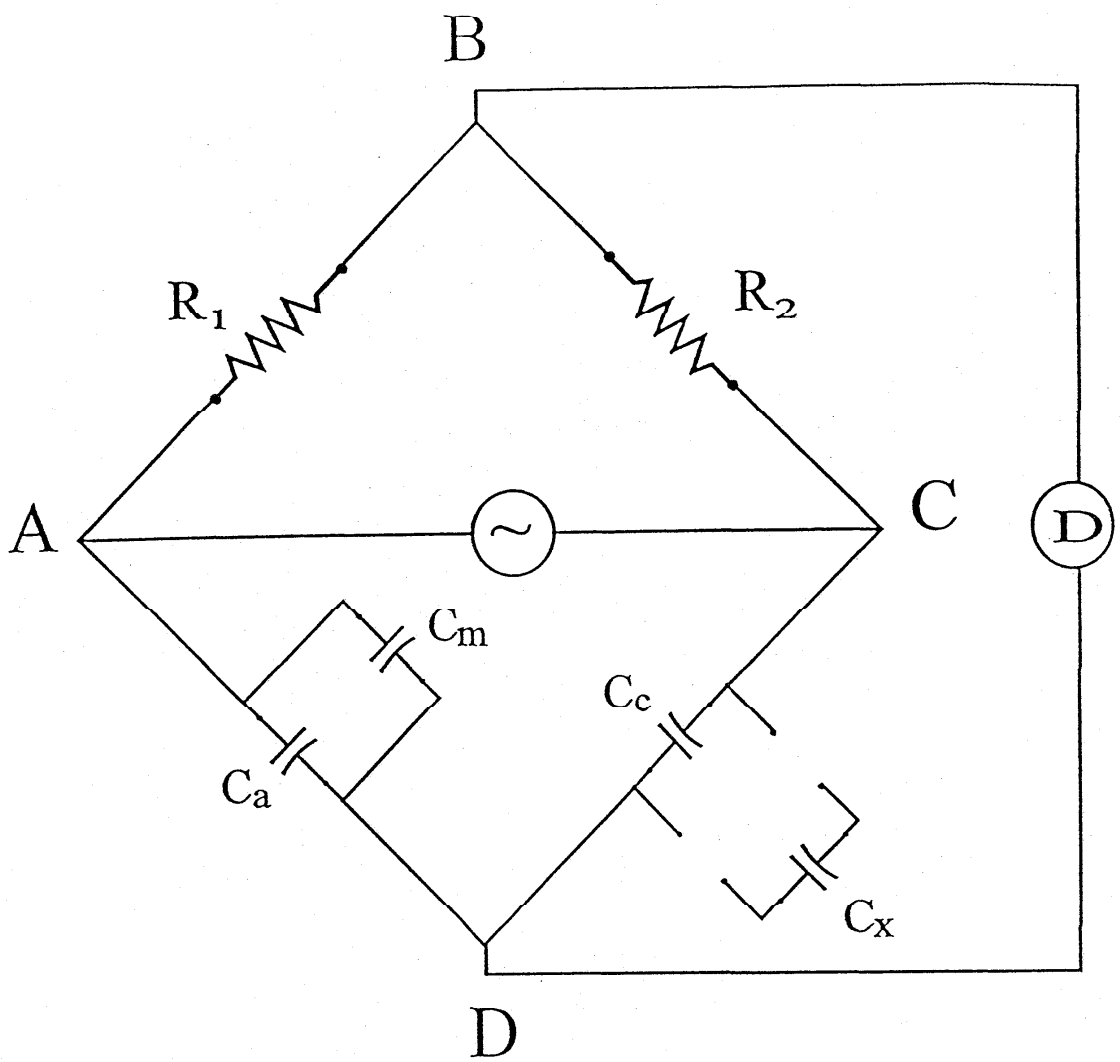

Figure 8. Components of the Type-12 Bridge for Two-Terminal Capacitance Measurements.

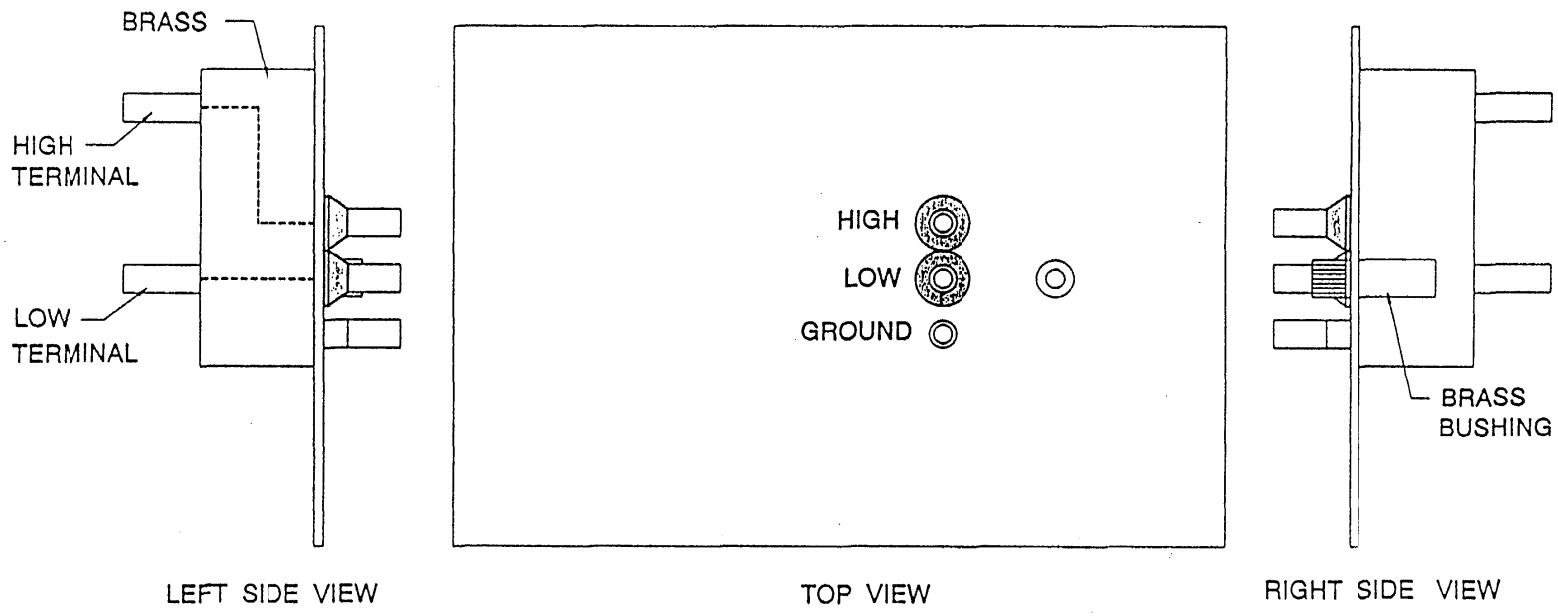

Figure 9. Fixture (P3) Used with the Type-12 Bridge for Three-Terminal Capacitance Measurements.

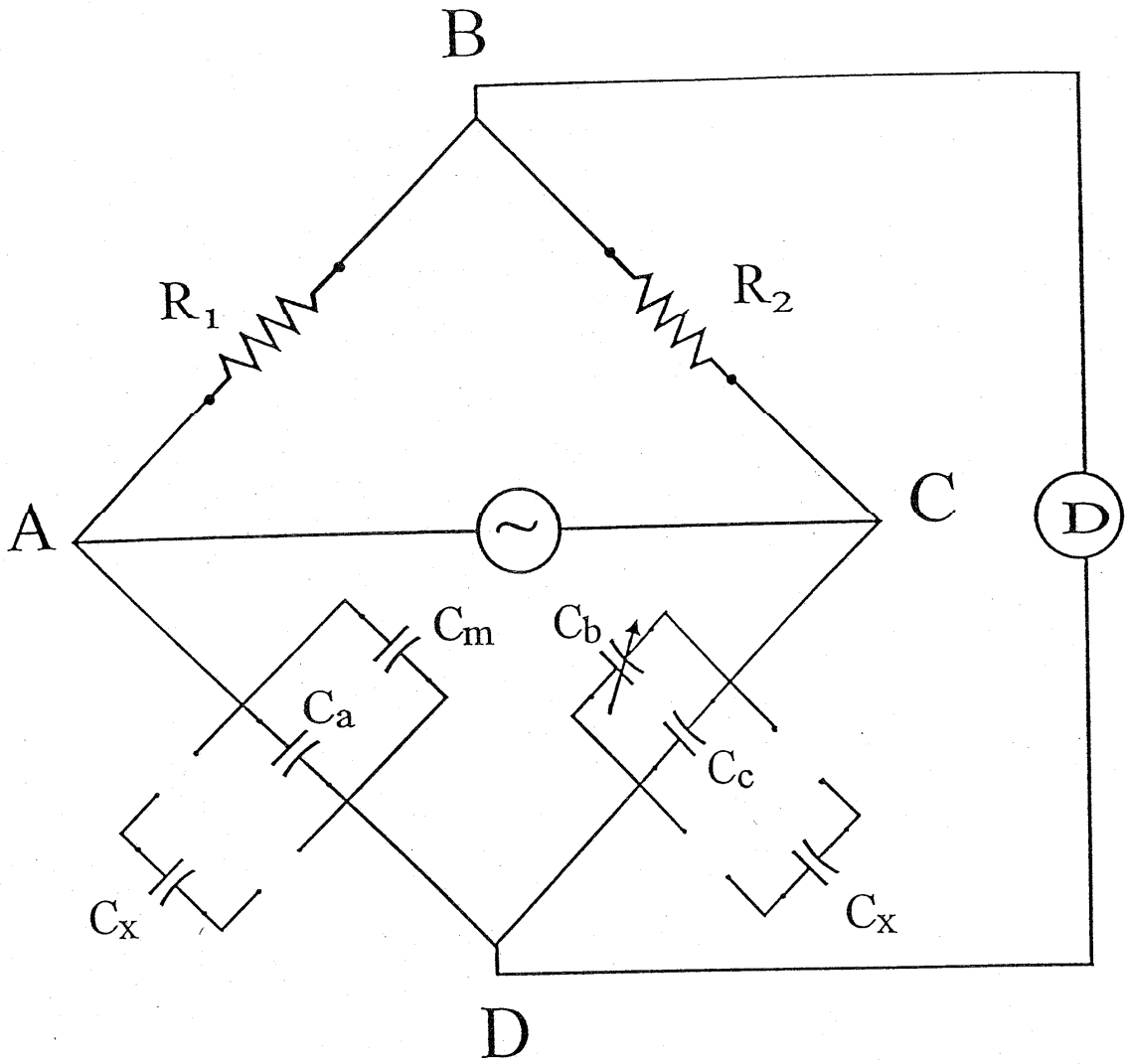

Figure 10. Components of the Type-12 Bridge for Three-Terminal Capacitance Measurements.

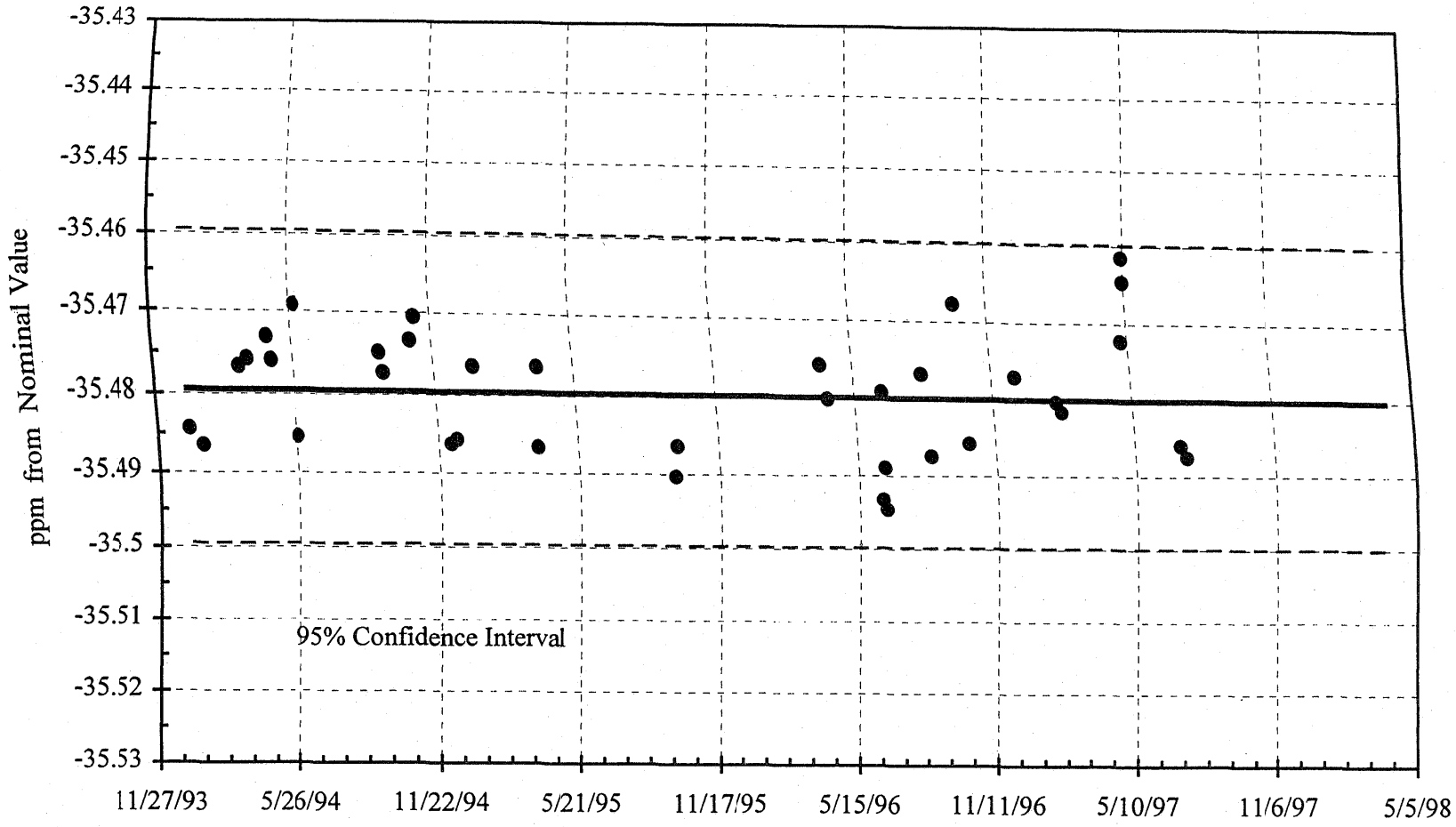

Figure 11. Average Value of Four Reference Standards (10 pF Oil-Bath Type) at Reference Temperature Values.

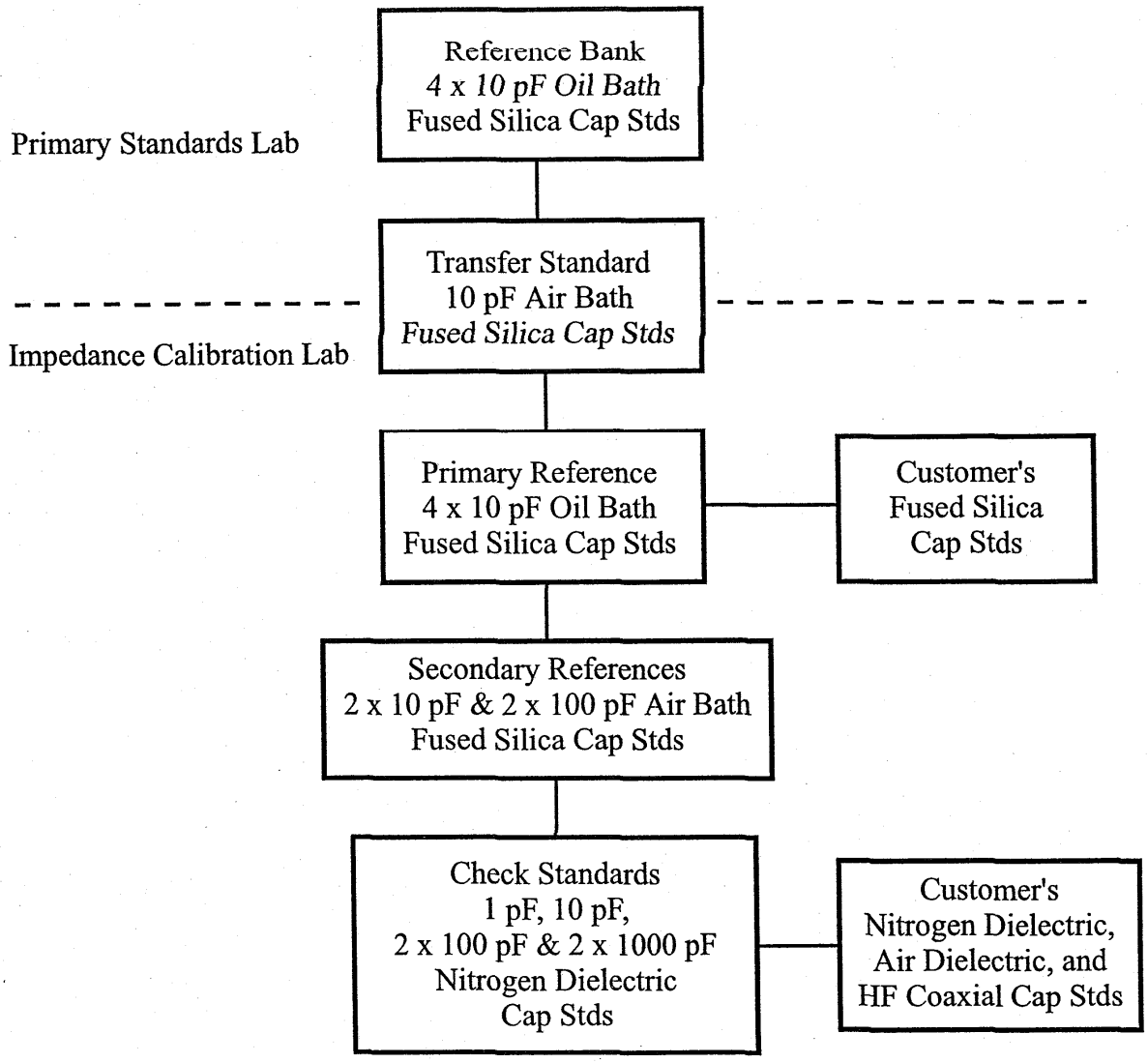

Figure 12. Block Diagram of the Farad Transfer and Calibration Process Using the Type-2 Bridge.

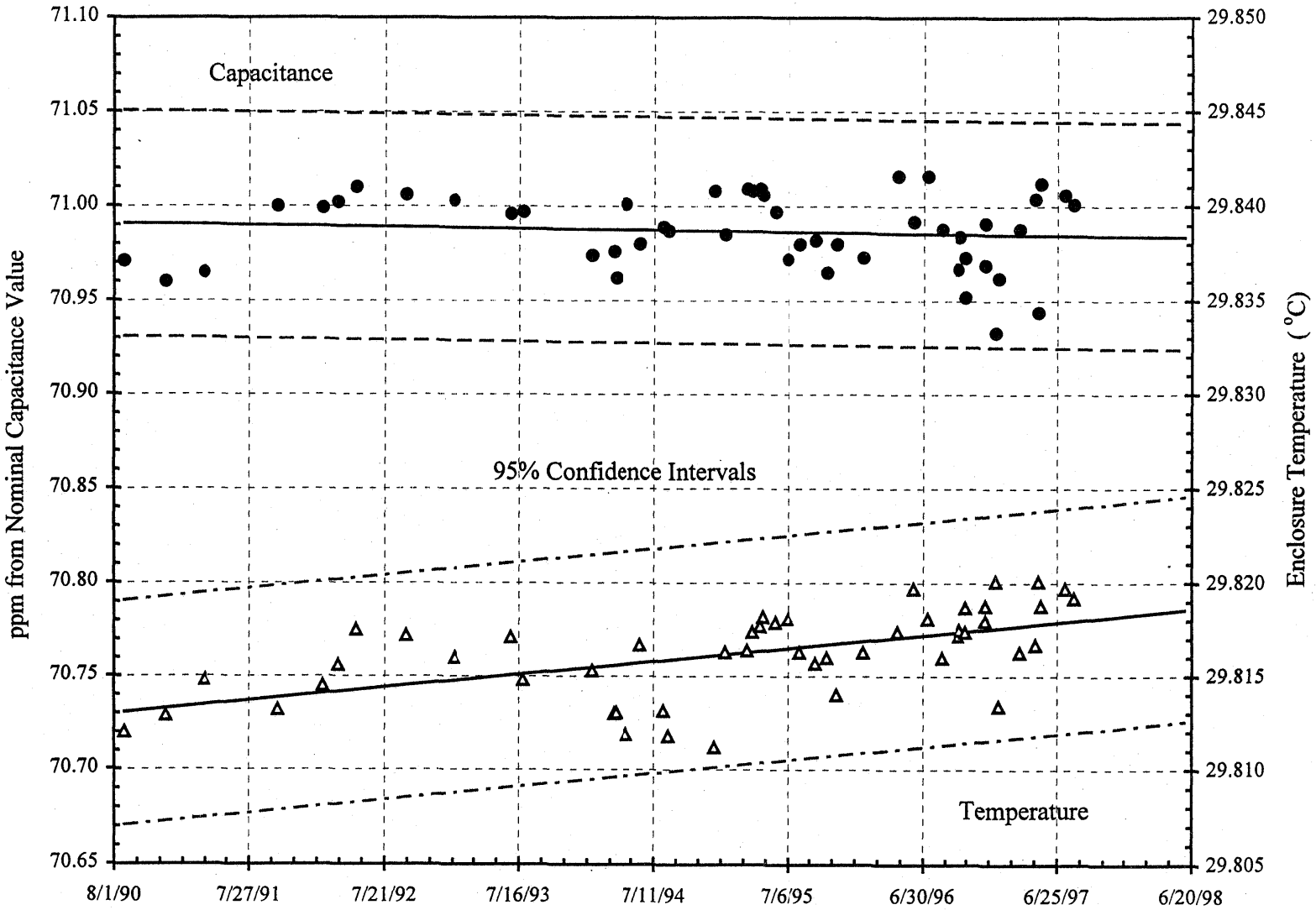

Figure 13. NIST Reference Standard #102 (10 pF Air-Bath Type)

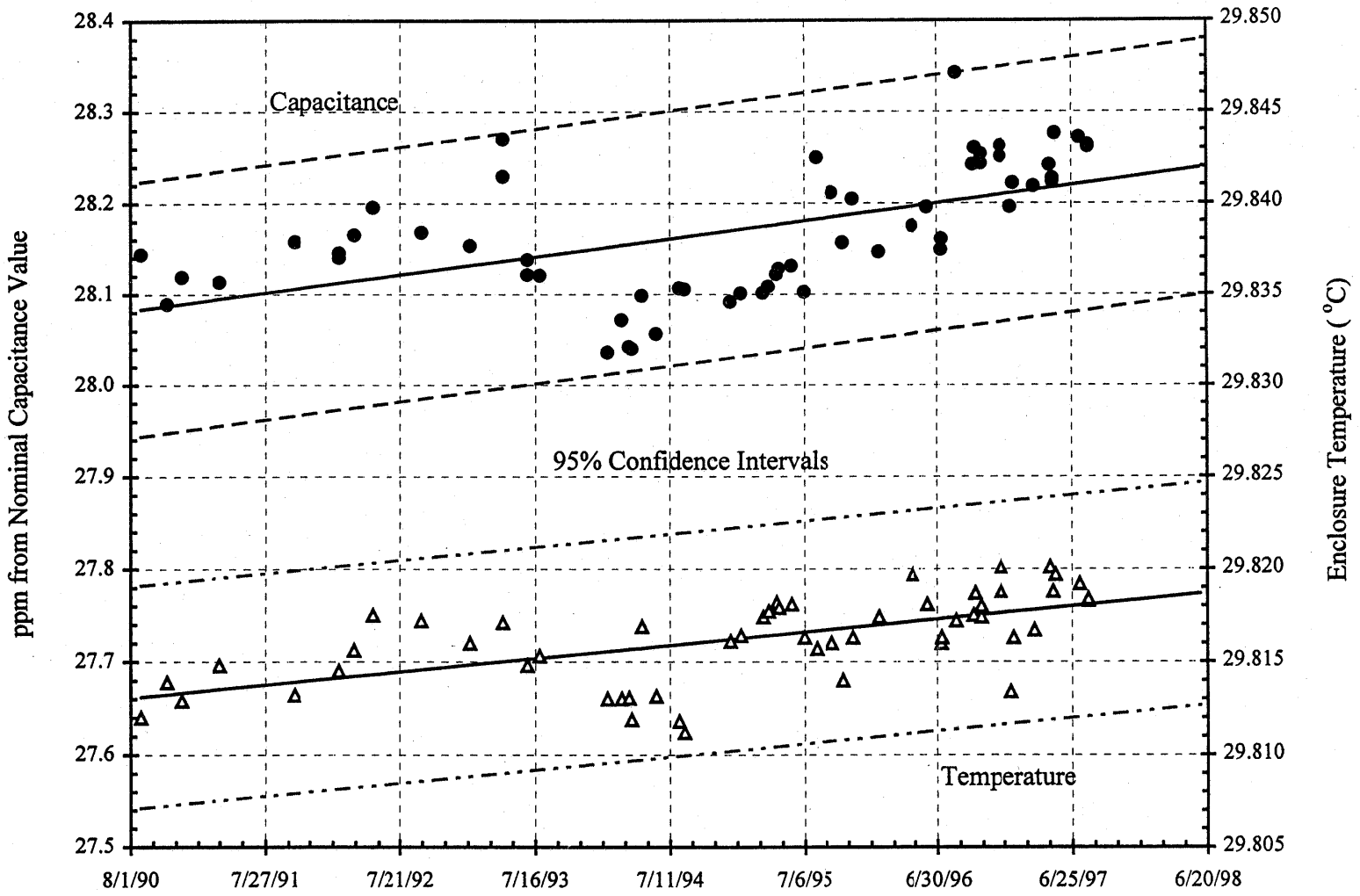

Figure 14. NIST Reference Standard #131 (100 pF Air-Bath Type)

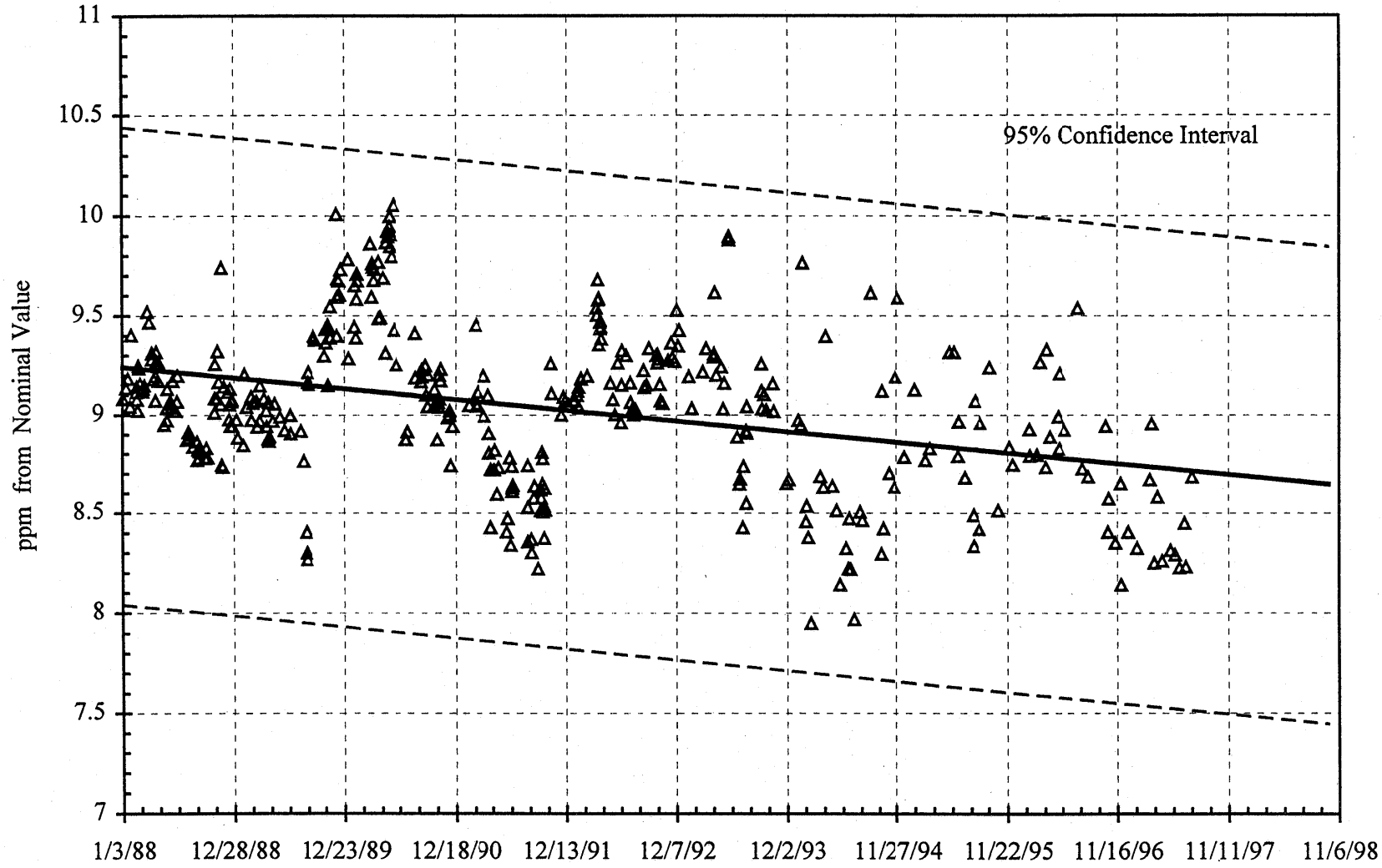

Figure 15. NIST Check Standard #1865 (1000 pF Nitrogen-Dielectric Capacitors)

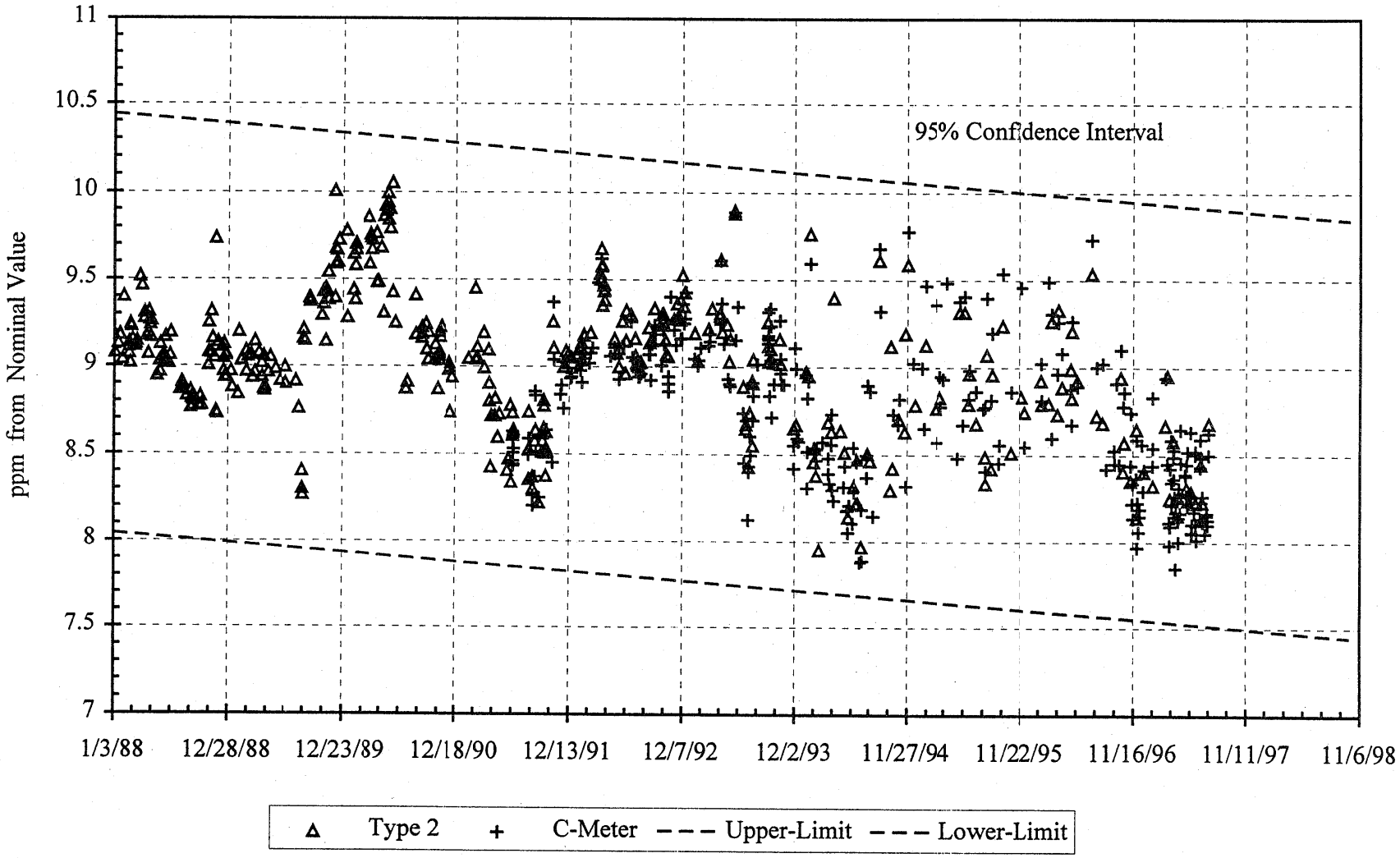

Figure 16. Data of NIST Check Standard #1865 Measured by Using the Type-2 Bridge and C-Meter.

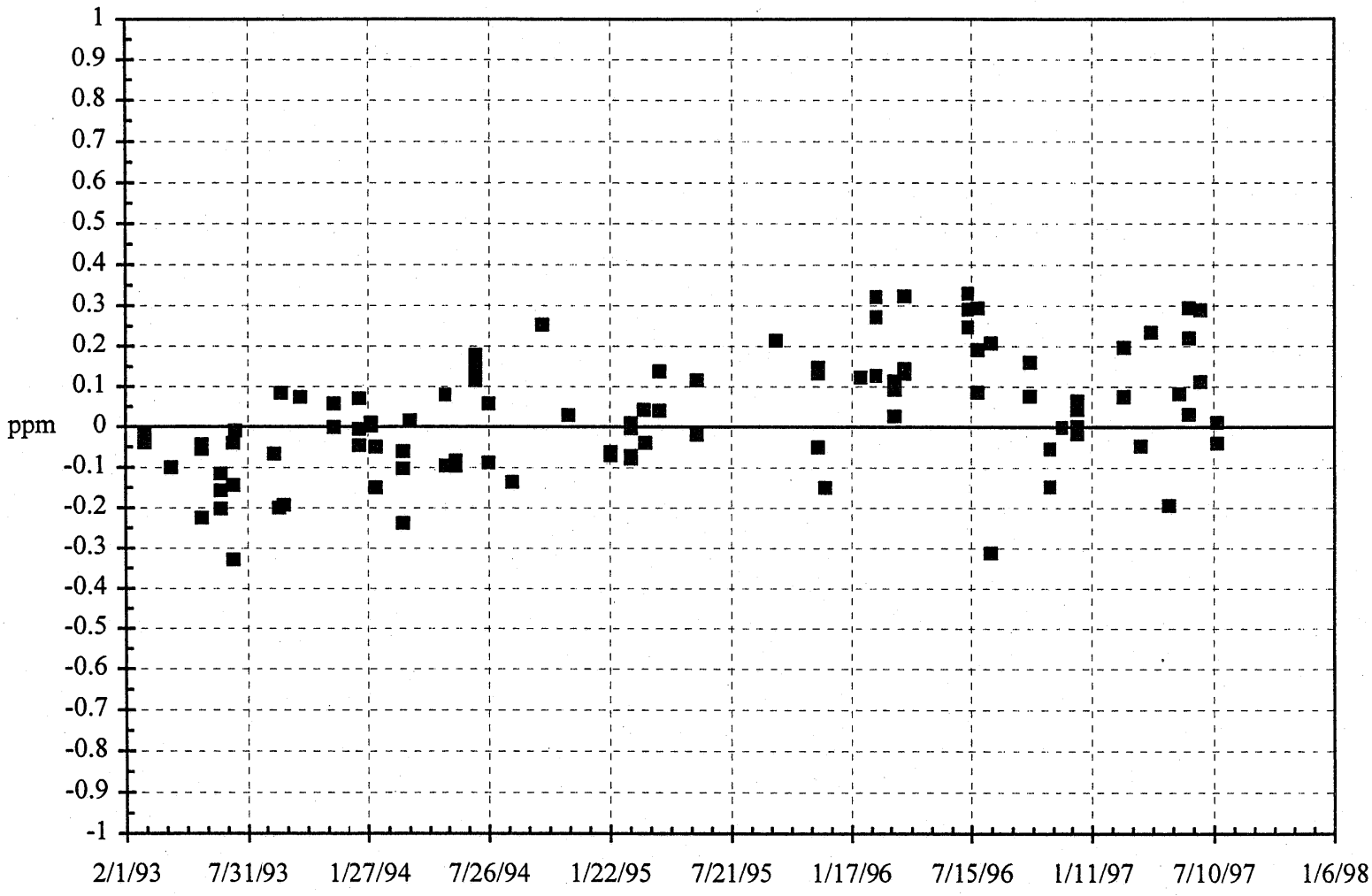

Figure 17a. Measurement Differences of 1000 pF Customer's Capacitors between using the C-Meter and the Type-2 Bridge.

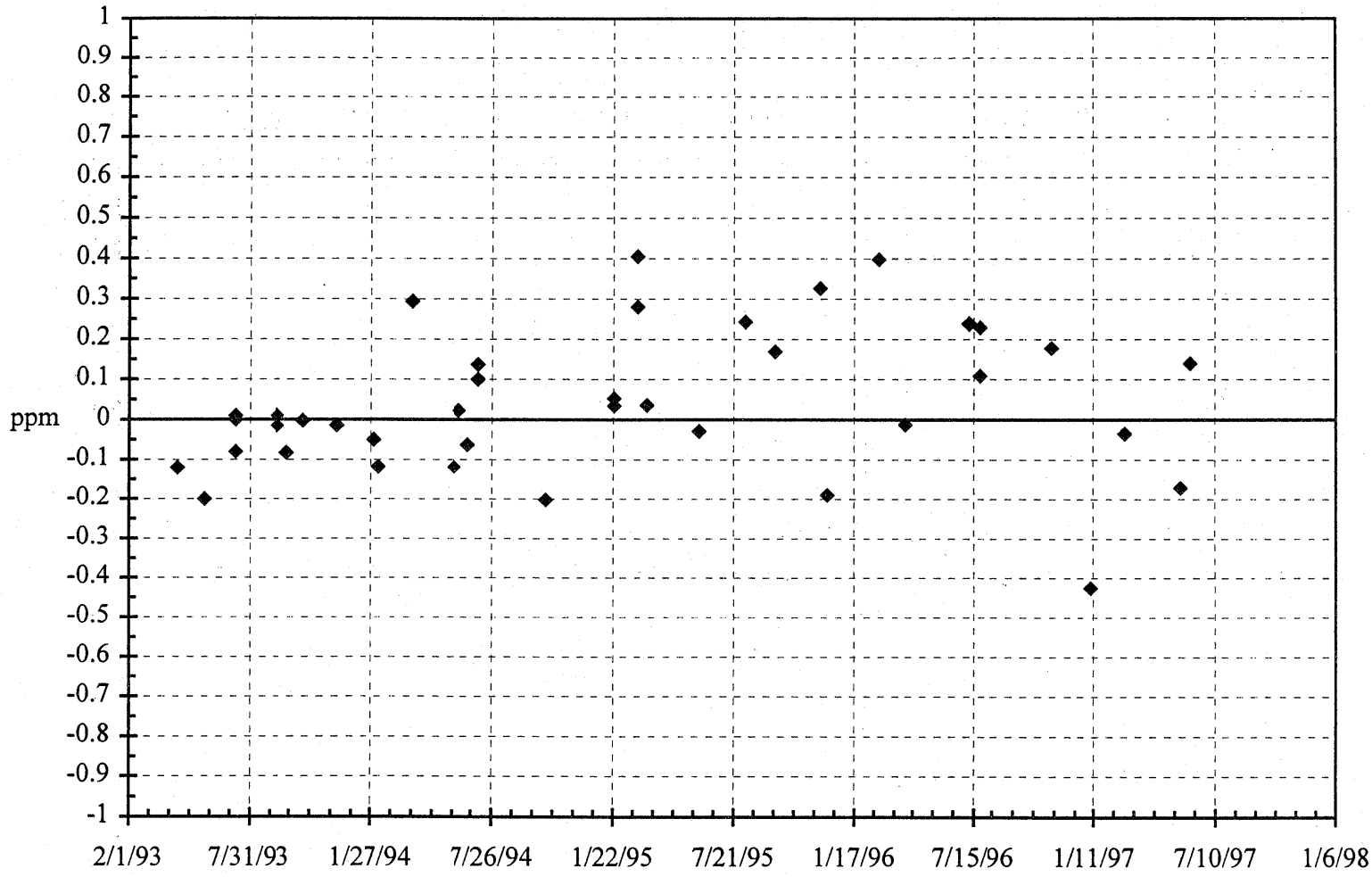

Figure 17b. Measurement Differences of 100 pF Customer's Capacitors between using the C-Meter and the Type-2 Bridge.

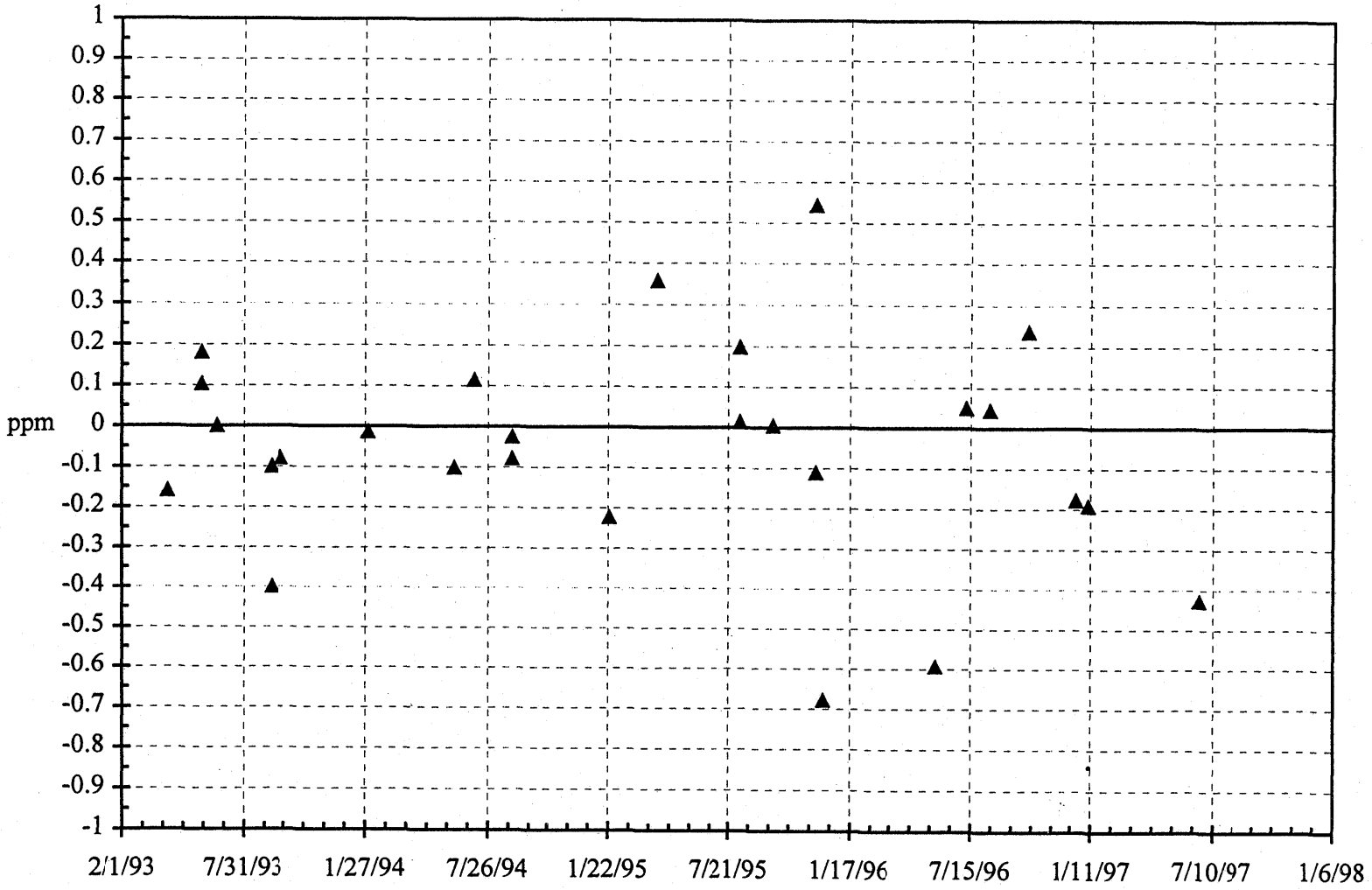

Figure 17c. Measurement Differences of 10 pF Customer's Capacitors between using the C-Meter and the Type-2 Bridge.

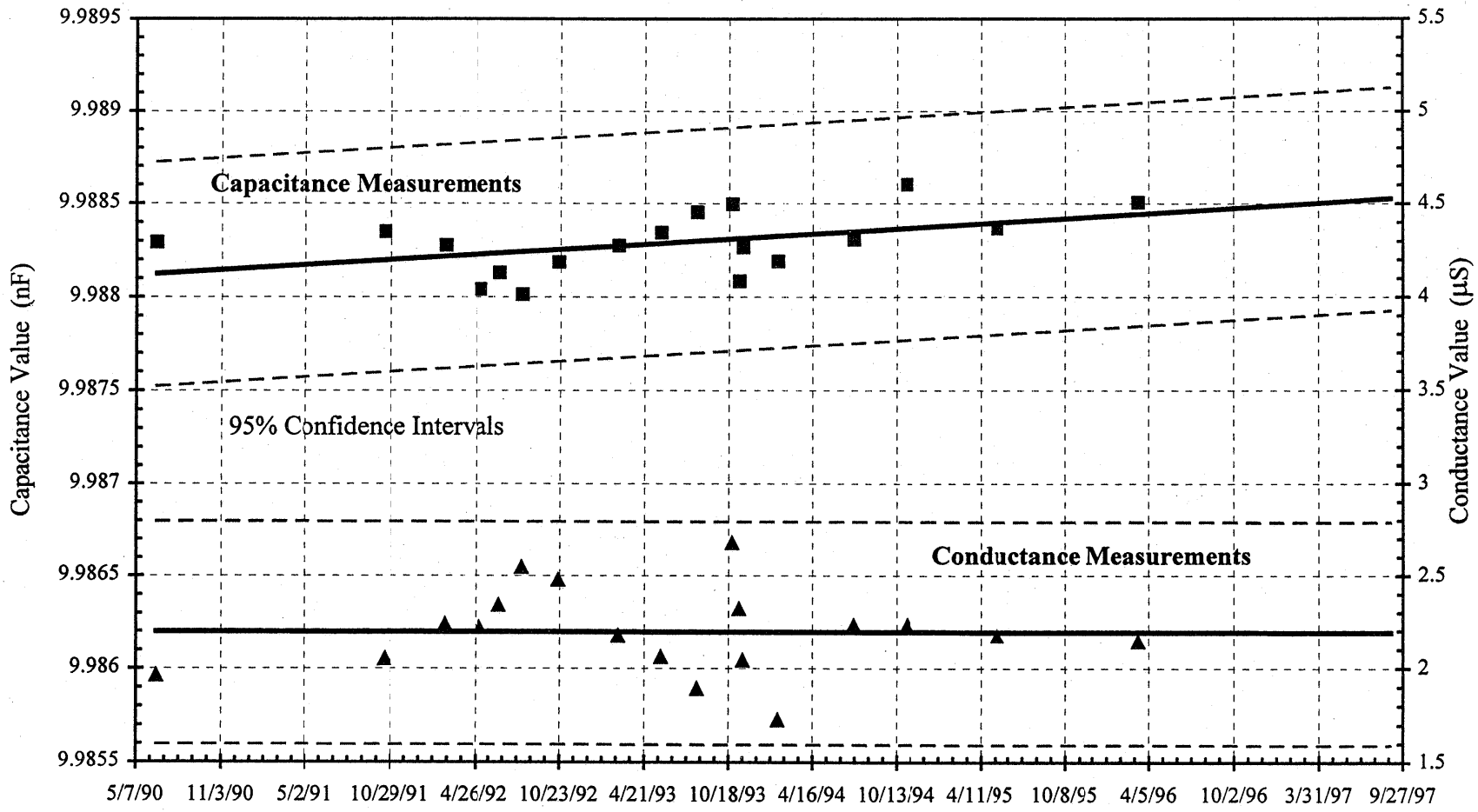

Figure 18. Three-Terminal Measurements of NIST Check Standard #27620 (0.01 µF Mica-Dielectric Capacitor).

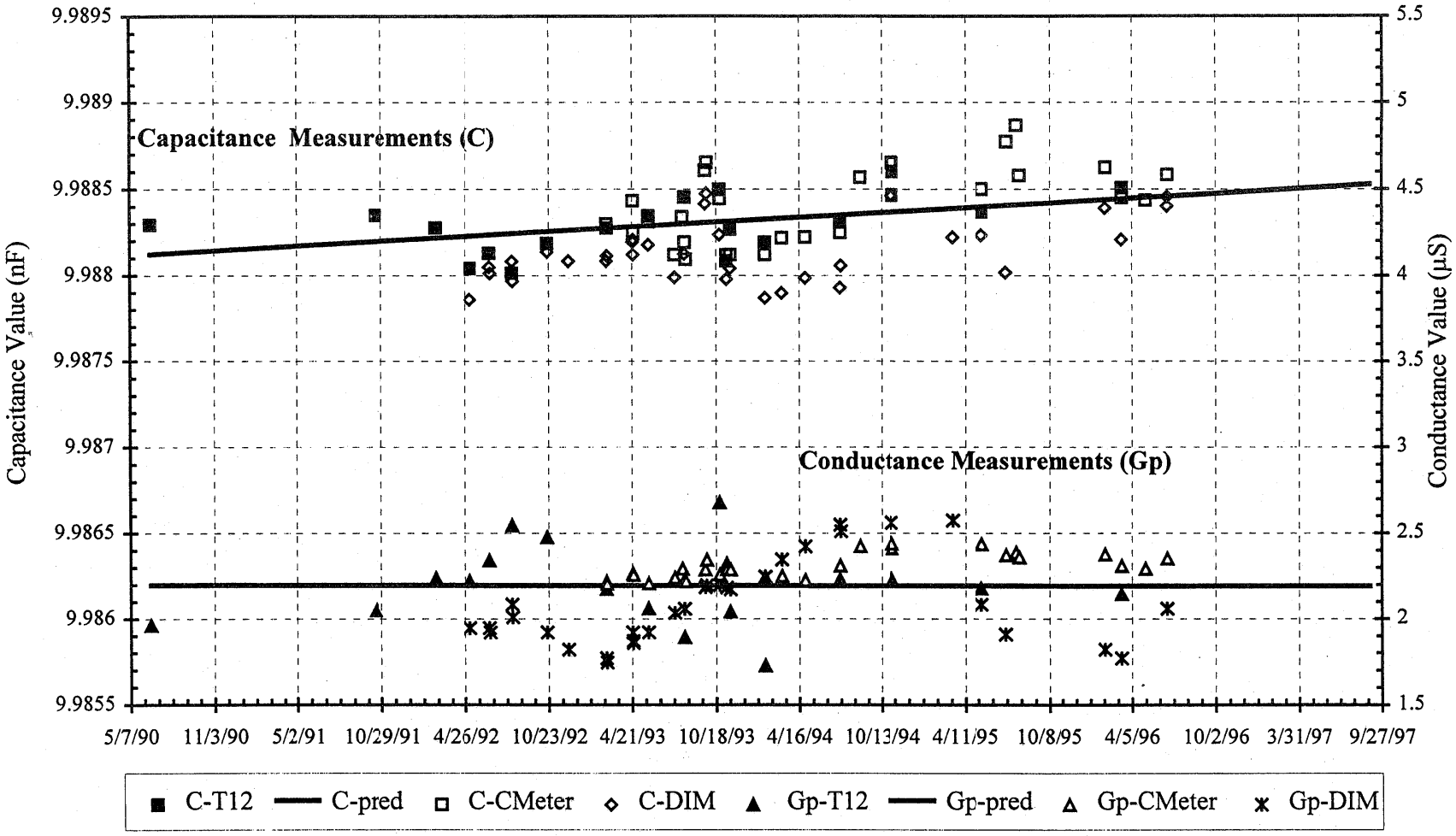

Figure 19. Data of NIST Check Standard #27620 Measured by Using the Type-12 Bridge, C-Meter, and DIM.

APPENDIX

A1. General Information on Fused-Silica-Dielectric Standard Capacitors.

A2. Typical REPORT OF CALIBRATION for Fused-Silica-Dielectric Standard Capacitors.

A3. General Information on Nitrogen-Dielectric Standard Capacitors.

A4. Typical REPORT OF CALIBRATION for Nitrogen-Dielectric Standard Capacitors.

A5. Description of Tests used to Determine the Effect of Small Mechanical Stress on High Stability, Nitrogen-Dielectric Standard capacitors.

A6. Typical REPORT OF CALIBRATION for Test Results of the Effect of Small Mechanical Stress on Nitrogen-Dielectric Standard Capacitors.

A7. General Information on Three-Terminal Standard Capacitors.

A8. Typical REPORT OF CALIBRATION for Three-Terminal Standard Capacitors.

A9. General Information on Two-Terminal Standard Capacitors with Precision Coaxial Connectors.

A10. Typical REPORT OF CALIBRATION for Two-Terminal Standard Capacitors with Precision Coaxial Connectors.

A11. General Information on Mica-Dielectric Standard Capacitors with Binding Post Connectors.

A12. Typical REPORT OF CALIBRATION for Mica-Dielectric Standard Capacitors with Binding Post Connectors.

UNITED STATES DEPARTMENT OF COMMERCE
National Institute of Standards and Technology
Gaithersburg, Maryland 20899-0001

GENERAL INFORMATION ON FUSED-SILICA-DIELECTRIC CAPACITORS

1. Representation of the Unit of Capacitance

As a result of new absolute measurements of the farad in terms of the units of length and time, the legal unit of capacitance was established at NIST/NBS in 1975 [1], and re-established in 1989 [2]. The reported values of capacitance since that time reflect the values assigned to NIST standards used for the maintenance of the legal unit. Since 1989, the difference between the NIST unit, which includes an allowance for possible drift, and the farad is believed to be no greater than ±0.1 ppm.

2. Fused-Silica Dielectric Standard Capacitors

Three-terminal standard capacitors of fused-silica dielectric are calibrated with a NIST transformer bridge [3] using NIST fused-silica 10-pF capacitors [4] as reference standards. Capacitance is measured by intercomparison with the reference standards in a least squares design.

The measured capacitances are the mean of the results of several measurements of direct capacitance with the capacitor connected to the NIST transformer bridge as a two-terminal-pair admittance [5]. If the terminals of the capacitor are not two-terminal-pair, connections with negligible impedance are made to make them so. All capacitors must be in the calibration laboratory for 72 hours or more before measurements are performed.

The temperature of an air-bath type fused-silica capacitor is obtained by means of a platinum resistance thermometer placed in the well of the bath. The Type B uncertainty of the measured temperatures is estimated to be 0.002 °C. The bridge used in measuring the resistance of the thermometer has a limiting resolution of 0.0001 °C.

The average ambient temperature of the laboratory is 23 °C ± 1 °C with hourly variations of about 0.1 °C. The variation of the ambient temperature may affect the temperature of the air-bath, which determines the value of a capacitor. Therefore, for best accuracy in the use of this type of capacitors, corrections for the capacitance value are required if the temperature of the air-bath is changed significantly. If it is not possible to apply corrections for the temperature differences, the magnitude of the errors usually can be estimated from information supplied by the manufacturer, and the uncertainty in the measurement increased accordingly.

The limiting resolution at 1000 Hz of the NIST transformer bridge and detector is 0.02 ppm. This is larger than the change of capacitance corresponding to the limiting resolution of the temperature measurement, which is equivalent in capacitance to 0.0012 ppm. Therefore, if the standard deviation of the average temperature is expressed as a change in capacitance, then it may be smaller than the

standard deviation of the measured capacitance by an order of magnitude or more.

The reported value of capacitance is in terms of the NIST unit of capacitance maintained with a group of stable standards [4]. The expanded uncertainties include allowance for both Type A and Type B uncertainties in the chain of calibration measurements, and are assigned to the capacitance values using the coverage factor $k = 2$ [6]. These do not include any uncertainties that may be associated with long term instability, temperature hysteresis, changes due to stresses incurred during shipment, and long term drift of the temperature of the enclosure of the air-bath type, fused-silica capacitors.

Measurements of three-terminal coaxial standard capacitors are not made at frequencies exceeding 1 kHz because of limitations in the present NIST measurement apparatus. Depending upon the construction and presence of films, the frequency dependence of the capacitors considered here ranges from 1 ppm to about 10 ppm for a frequency change from 100 Hz to 1 kHz. The principal factor causing such changes is usually the variation in dielectric constant with frequency of insulating material located so that it changes the electrostatic field associated with the direct capacitance. Frequency dependence due to series inductance and resistance can be estimated from manufacturer's data or by resonance methods [7].

3. References

[1] R.D. Cutkosky, "New NBS Measurements of the Absolute Farad and Ohm," IEEE Trans. on Instrumentation and Measurements, Vol. IM 23, No. 4, Dec. 1974.

[2] J. Q. Shields, R. F. Dziuba, and H. P. Layer, "New Realization of the Ohm and Farad Using the NBS Calculable Capacitor," IEEE Trans. Instrum. Meas. Vol. 38, No. 2, pp. 249-251, April 1989.

[3] M. C. McGregor, J. F. Hersh, R. D. Cutkosky, F. K. Harris, and F. R. Kotter, "New Apparatus at the National Bureau of Standards for Absolute Capacitance Measurement," IRE Trans. on Instr., Vol. I-7, No. 3 & 4, pp. 253-261, Dec. 1958.

[4] R. D. Cutkosky and L. H. Lee, "Improved Ten-picofarad Fused Silica Dielectric Capacitor," Jour. of Res. NBS, Vol. 69C, No. 3, July & Sept. 1965.

[5] A. M. Thompson, "The Precise Measurement of Small Capacitances," IRE Trans. on Instr., Vol. I-7, No. 3 & 4, pp. 245-255, Dec. 1958.

[6] B. N. Taylor and C. E. Kuyatt, "Guidelines for Evaluating and Expressing the Uncertainty of NIST Measurement Results," NIST Tech. Note No. 1297, Jan. 1993.

[7] R.N. Jones, "A Technique for Extrapolating the 1 kC Values of Secondary Capacitance Standards to Higher Frequencies," NBS Tech. Note No. 201, Nov. 1963.

UNITED STATES DEPARTMENT OF COMMERCE
National Institute of Standards and Technology
Gaithersburg, Maryland 20899-0001

REPORT OF CALIBRATION

Standard Capacitor

General Radio Company
Type 1408-A, Serial No. ####
Enclosure Serial No. ####

Submitted by:

Frequency (Hz)	Average Temperature (°C)	Range of Temperature (°C)	Capacitance (pF)	Type-A Uncertainty (ppm)	Expanded Uncertainty (ppm)
1000	23.1234	0.1234	10.0012346	0.02	2.5

The reported temperatures are based upon ten or more measurements. The capacitance is based upon five or more intercomparisons with similar capacitors. The Type-A uncertainty given above is calculated from measured values, indicating the capacitor's behavior. The expanded uncertainty given above is the combined standard uncertainty expanded by a coverage factor of $k = 2$.

For additional information regarding the calibration of capacitors of this type at NIST, the user should consult the information sheet(s) enclosed with this report.

Period of Calibration: December 1, 1997 to December 15, 1997

Measurements performed by:

For the Director,

Summerfield B. Tillett
Engineering Technician

Barry A. Bell, Group Leader
Electricity Division

Test Report No.: 811/
Reference:
Date: January 6, 1998
Telephone Contact: 301-975-4221

NIST

UNITED STATES DEPARTMENT OF COMMERCE
National Institute of Standards and Technology
Gaithersburg, Maryland 20899-0001

GENERAL INFORMATION ON NITROGEN-DIELECTRIC STANDARD CAPACITORS

1. Representation of the Unit of Capacitance

As a result of new absolute measurements of the farad in terms of the units of length and time, the legal unit of capacitance was established at NIST/NBS in 1975 [1], and re-established in 1989 [2]. The reported values of capacitance since that time reflect the values assigned to NIST standards used for the maintenance of the legal unit. Since 1989, the difference between the NIST unit, which includes an allowance for possible drift, and the farad is believed to be no greater than ±0.1 ppm.

2. Nitrogen Dielectric Standard Capacitors

Three-terminal standard capacitors of nitrogen dielectric are calibrated with a NIST transformer bridge [3] using NIST fused-silica 10-pF capacitors [4] as reference standards. Capacitance is measured by direct comparison with stable working standards, which are calibrated in terms of the reference standards with the NIST transformer bridge. This is done each time they are used.

The measured capacitances are the mean of the results of two or more measurements of direct capacitance with the capacitor connected to the NIST transformer bridge as a two-terminal-pair admittance [5]. If the terminals of the capacitor are not two-terminal-pair, connections with negligible impedance are made to make them so. All capacitors must be in the calibration laboratory for 72 hours or more before measurements are performed. The average ambient temperature of the laboratory is 23 °C ± 1 °C with hourly variations of about 0.1 °C. The relative humidity in the laboratory varies but does not exceed 50%.

During the measurements in small uncertainty calibrations, the capacitor to be calibrated is placed in a partially insulated box and the platinum resistance probe of a digital thermometer is placed near the capacitor. The temperature of the capacitor is obtained by direct readouts of the thermometer, which has a resolution of 0.001 °C and limits of errors of ± 0.01 °C. The capacitance and temperature values given in the Report of Calibration are the average values of the respective measurement results. The standard deviation of the capacitance measurements is also calculated to assure it is within limits based on the estimated population standard deviation.

If it is requested, six physical tests are performed on the capacitor to detect the effects of mechanical stress on it. If these tests are performed on a capacitor, a description of the tests and the results of the tests for the capacitor will be given in a separate Report of Calibration.

The reported value of capacitance is in terms of the NIST unit of capacitance maintained with a group of stable standards [4]. The expanded uncertainties include allowance for both Type A and

Type B uncertainties in the chain of measurements, and are assigned to the capacitance values using the coverage factor $k = 2$ [6]. These do not include any uncertainties that may be associated with long term instability, temperature hysteresis, and changes due to stresses incurred during shipment.

Measurements of three-terminal coaxial standard capacitors are not made at frequencies exceeding 1 kHz because of limitations in the present NIST measurement apparatus. Depending upon the construction and presence of films, the frequency dependence of the capacitors considered here ranges from 1 ppm to about 10 ppm for a frequency change from 100 Hz to 1 kHz. The principal factor causing such changes is usually the variation in dielectric constant with frequency of insulating material located so that it changes the electrostatic field associated with the direct capacitance. Frequency dependence due to series inductance and resistance can be estimated from manufacturer's data or by resonance methods [7].

For best accuracy in the use of this type of capacitors, corrections for the capacitance values may be required if the temperature is changed significantly. If it is not possible to apply corrections for the temperature differences, the magnitude of the errors usually can be estimated from information supplied by the manufacturer, and the uncertainty in the measurement increased accordingly.

1.5 References

[1] R.D. Cutkosky, "New NBS Measurements of the Absolute Farad and Ohm," IEEE Trans. on Instrumentation and Measurements, Vol. IM 23, No. 4, Dec. 1974.

[2] J. Q. Shields, R. F. Dziuba, and H. P. Layer, "New Realization of the Ohm and Farad Using the NBS Calculable Capacitor," IEEE Trans. Instrum. Meas. Vol. 38, No. 2, pp. 249-251, April 1989.

[3] M. C. McGregor, J. F. Hersh, R. D. Cutkosky, F. K. Harris, and F. R. Kotter, "New Apparatus at the National Bureau of Standards for Absolute Capacitance Measurement," IRE Trans. on Instr., Vol. I-7, No. 3 & 4, pp. 253-261, Dec. 1958.

[4] R. D. Cutkosky and L. H. Lee, "Improved Ten-picofarad Fused Silica Dielectric Capacitor," Jour. of Res. NBS, Vol. 69C, No. 3, July & Sept. 1965.

[5] A. M. Thompson, "The Precise Measurement of Small Capacitances," IRE Trans. on Instr., Vol. I-7, No. 3 & 4, pp. 245-255, Dec. 1958.

[6] B. N. Taylor and C. E. Kuyatt, "Guidelines for Evaluating and Expressing the Uncertainty of NIST Measurement Results," NIST Tech. Note No. 1297, Jan. 1993.

[7] R.N. Jones, "A Technique for Extrapolating the 1 kC Values of Secondary Capacitance Standards to Higher Frequencies," NBS Tech. Note No. 201, Nov. 1963.

UNITED STATES DEPARTMENT OF COMMERCE
National Institute of Standards and Technology
Gaithersburg, Maryland 20899-0001

REPORT OF CALIBRATION

Standard Capacitor

General Radio Company
Type 1404-A, Serial No. ####

Submitted by:

Frequency (Hz)	Temperature (°C)	Capacitance (pF)	Expanded Uncertainty (ppm)
1000	**22.34**	**999.9998**	**4**

The expanded uncertainty stated above is valid only if the results of the tests used to determine the effects of small mechanical stresses are of the order of a few tenths of a ppm. These test results are given in the accompanying report.

For additional information regarding the calibration of capacitors of this type at NIST, the user should consult the information sheet(s) enclosed with this report.

Date of Calibration: April 3, 1997

Measurements performed by:

For the Director,

Sumerfield B. Tillett
Electricity Division

Barry A. Bell, Group Leader
Electricity Division

Test No. 811/
Reference:
Date: January 6, 1998
Telephone Contact: 301-975-4221

NIST

UNITED STATES DEPARTMENT OF COMMERCE
National Institute of Standards and Technology
Gaithersburg, Maryland 20899-0001

DESCRIPTION OF TESTS USED TO DETERMINE THE EFFECT OF SMALL MECHANICAL STRESSES ON HIGH STABILITY, NITROGEN-DIELECTRIC STANDARD CAPACITORS

The high stability, nitrogen-dielectric standard capacitors with coaxial connectors and having nominal values of (10, 100 and 1000) pF are not susceptible to changes due to the stresses of normal handling and proper shipping. However, experience has shown that there are a significant number that exhibit unusual changes in value when mechanical stresses are applied. These changes are not usually detected during calibration measurements because most operators will handle the capacitors very carefully. Careful handling during measurement, while appropriate for the actual determination of capacitance value, will not result in the detection of changes in capacitance which may occur when the capacitor is handled roughly or during shipment. Six tests have been devised to determine a capacitor's response to some small stresses which any capacitor may be subjected to.

These tests are named the Orientation Test, Small Angle Test, Tilt Test, Knock Soft Test, Knock Hard Test, and Drop Test. These names are nomenclatures rather than accurate descriptors of the tests. They are performed in the order given since some of the stresses in the first tests do affect the later tests.

The following is a brief description of each test's procedure and data reduction. Except for the orientation and small angle tests, data reduction is the same for all tests.

ORIENTATION TEST - The capacitance is measured with the capacitor in its usual upright position, lying on each of its four sides, and back to the original upright position. The five differences between the capacitances of the six orientations are calculated. Then the maximum difference is given as the result for this test. The original purpose of this test was to determine whether it could be used to predict the results of the other tests or not. It has been shown that it is not correlated with the other tests except for the Small Angle Test.

SMALL ANGLE TEST - The capacitor is placed on a horizontal surface and its capacitance measured. Then a side is elevated three degrees above horizontal and the capacitance measured. This is repeated for the remaining three sides. The changes in capacitance resulting from the elevation of each side from the horizontal are calculated. The range of these changes is given as the result of this test.

TILT TEST - The capacitor is placed in the usual upright position and its capacitance measured. Then one side of the capacitor is rotated to the horizontal position and returned to the upright position and its capacitance re-measured. This is repeated for the remaining sides and for the top. The five successive differences between the six measured capacitances are calculated. The range

of these differences is given as the result of this test.

KNOCK SOFT TEST - In this test the capacitor is struck by a rubber tipped pendulum. The force generated by the pendulum is roughly equivalent to that generated by a mild wrist motion blow of the human hand. The capacitor is placed in the usual upright position and its capacitance measured. Then the pendulum is rotated 45 degrees and allowed to strike the capacitor's top edge once, after which its capacitance is measured. This is repeated for the remaining sides and the four corners. The successive differences between the measured capacitances are calculated. The range of these differences is given as the result of this test.

KNOCK HARD TEST - This test is identical to the Knock Soft Test except that a plastic tipped pendulum rotated 15 degrees is used.

DROP TEST - The capacitor is placed in the upright position and its capacitance measured. Then the bottom of a side is raised 3.8 centimeters and allowed to drop freely. The capacitance is re-measured after this drop. This is repeated for the remaining sides. The successive differences are calculated and the range of these differences is given as the result of this test.

UNITED STATES DEPARTMENT OF COMMERCE
National Institute of Standards and Technology
Gaithersburg, Maryland 20899-0001

REPORT OF CALIBRATION

Standard Capacitor

General Radio Company
Type 1404-A
Serial No. ####

Submitted by:

Orientation (Maximum)	Small Angle (Range)	Tilt (Range)	Knock Soft (Range)	Knock Hard (Range)	Drop (Range)
0.74	0.13	0.11	0.13	0.21	0.06

The results of the six tests are used to determine the effects of small mechanical stresses on high-stability, nitrogen dielectric standard capacitors are given above, in units of parts per million (ppm). They are not included in the expanded uncertainty given in the accompanying report of calibration (NIST SP250 Service ID No. 52140C). Therefore, except for the results of the orientation test, the above values should be included in the expanded uncertainty of the calibration as the Type B uncertainty, especially if any of them are larger than 0.5 ppm. Unless the standard is carefully hand-carried back to the user's laboratory and then left in the upright position at all times, the expanded uncertainty in the other report should be increased by one half of the sum of all the ranges.

For additional information regarding the calibration of capacitors of this type at NIST, the user should consult the information sheet(s) enclosed with this report.

Date of Calibration: April 3, 1997

Measurements performed by:

For the Director,

Summerfield B. Tillett
Engineering Technician

Barry A. Bell, Group Leader
Electricity Division

Test Report No.: 811/
Reference:
Date: January 5, 1998
Telephone Contact: 301-975-4221

NIST

UNITED STATES DEPARTMENT OF COMMERCE
National Institute of Standards and Technology
Gaithersburg, Maryland 20899-0001

GENERAL INFORMATION ON THREE-TERMINAL STANDARD CAPACITORS

1. Representation of the Unit of Capacitance

As a result of new absolute measurements of the farad in terms of the units of length and time, the legal unit of capacitance was established at NIST/NBS in 1975 [1], and re-established in 1989 [2]. The reported values of capacitance since that time reflect the values assigned to NIST standards used for the maintenance of the legal unit. Since 1989, the difference between the NIST unit, which includes an allowance for possible drift, and the farad is believed to be no greater than ±0.1 ppm.

2. Three-Terminal Standard Capacitors

Three-terminal standard capacitors of nitrogen and air dielectric are calibrated with a NIST transformer bridge [3] using NIST fused-silica 10-pF capacitors [4] as reference standards. Capacitance is measured by direct comparison with stable working standards, which are calibrated in terms of the reference standards. This is done each time they are used.

The measured capacitances are the results of two or more measurements of direct capacitance with the capacitor connected to the NIST transformer bridge as a two-terminal-pair admittance [5]. If the terminals of the capacitor are not two-terminal-pair, connections with negligible impedance are made to make them so. All capacitors must be in the calibration laboratory for 72 hours or more before measurements are performed.

The average ambient temperature of the laboratory is 23 °C ± 1 °C, with hourly variations of about 0.1 °C, which is the temperature values given in the Report of Calibration. Measurements are not made if the ambient laboratory temperature differed from the set-point by more than 1 °C during the last 24 hours. The standard deviation of the capacitance measurements is also calculated to assure it is within limits of the estimated population standard deviation. The relative humidity in the laboratory varies but does not exceed 50%.

The reported value of capacitance is in terms of the NIST unit of capacitance maintained with a group of stable standards [4]. The expanded uncertainties include allowance for both Type A and Type B uncertainties in the chain of calibration measurements, and are assigned to the capacitance values using the coverage factor $k = 2$ [6]. These do not include any uncertainties that may be associated with long term instability, temperature hysteresis, changes due to stresses incurred during shipment. In addition, no allowance is made for the variations in the capacitance of unsealed air dielectric capacitors due to changes in humidity since the magnitude of these variations is dependent upon the surface conditions of the plates.

Measurements of three-terminal coaxial standard capacitors are not made at frequencies exceeding 1 kHz due to limitations in the present NIST measurement apparatus. Depending upon the construction and presence of films, the frequency dependence of the capacitors considered here ranges from 1 ppm to about 10 ppm for a frequency change from 100 Hz to 1 kHz. The principal factor causing such changes is usually the variation in dielectric constant with frequency of insulating material located so that it changes the electrostatic field associated with the direct capacitance. Frequency dependence due to series inductance and resistance can be estimated from manufacturer's data or by resonance methods [7].

For best accuracy in the use of this type of capacitors, corrections for the capacitance values may be required if the temperature is changed significantly. If it is not possible to apply corrections for the temperature differences, the magnitude of the errors usually can be estimated from information supplied by the manufacturer, and the uncertainty in the measurement increased accordingly.

1.5 References

[1] R.D. Cutkosky, "New NBS Measurements of the Absolute Farad and Ohm," IEEE Trans. on Instrumentation and Measurements, Vol. IM 23, No. 4, Dec. 1974.

[2] J. Q. Shields, R. F. Dziuba, and H. P. Layer, "New Realization of the Ohm and Farad Using the NBS Calculable Capacitor," IEEE Trans. Instrum. Meas. Vol. 38, No. 2, pp. 249-251, April 1989.

[3] M. C. McGregor, J. F. Hersh, R. D. Cutkosky, F. K. Harris, and F. R. Kotter, "New Apparatus at the National Bureau of Standards for Absolute Capacitance Measurement," IRE Trans. on Instr., Vol. I-7, No. 3 & 4, pp. 253-261, Dec. 1958.

[4] R. D. Cutkosky and L. H. Lee, "Improved Ten-picofarad Fused Silica Dielectric Capacitor," Jour. of Res. NBS, Vol. 69C, No. 3, July & Sept. 1965.

[5] A. M. Thompson, "The Precise Measurement of Small Capacitances," IRE Trans. on Instr., Vol. I-7, No. 3 & 4, pp. 245-255, Dec. 1958.

[6] B. N. Taylor and C. E. Kuyatt, "Guidelines for Evaluating and Expressing the Uncertainty of NIST Measurement Results," NIST Tech. Note No. 1297, Jan. 1993.

[7] R.N. Jones, "A Technique for Extrapolating the 1 kC Values of Secondary Capacitance Standards to Higher Frequencies," NBS Tech. Note No. 201, Nov. 1963.

UNITED STATES DEPARTMENT OF COMMERCE
National Institute of Standards and Technology
Gaithersburg, Maryland 20899-0001

REPORT OF CALIBRATION

Standard Capacitor

General Radio Company
Type 1403-D, Serial No. ####

Submitted by:

Frequency (Hz)	Capacitance (pF)	Expanded Uncertainty (%)
1000	100.013	100

For additional information regarding the calibration of capacitors of this type at NIST, the user should consult the information sheet(s) enclosed with this report.

Temperature: 23 ° C ± 1 ° C

Date of Calibration: December 1, 1997

Measurements performed by:

Summerfield B. Tillett
Electricity Division

For the Director,

Barry A. Bell, Group Leader
Electricity Division

Test No. 811/
Reference:
Date: January 6, 1998
Telephone Contact: 301-975-4221

NIST

UNITED STATES DEPARTMENT OF COMMERCE
National Institute of Standards and Technology
Gaithersburg, Maryland 20899-0001

GENERAL INFORMATION ON TWO-TERMINAL STANDARD CAPACITORS WITH PRECISION COAXIAL CONNECTORS

1. Representation of the Unit of Capacitance

As a result of new absolute measurements of the farad in terms of the units of length and time, the legal unit of capacitance was established at NIST/NBS in 1975 [1], and re-established in 1989 [2]. The reported values of capacitance since that time reflect the values assigned to NIST standards used for the maintenance of the legal unit. Since 1989, the difference between the NIST unit, which includes an allowance for possible drift, and the farad is believed to be no greater than ±0.1 ppm.

2. Two-Terminal Standard Capacitors with HF Coaxial Connectors

Standard capacitors with precision coaxial connectors [3] are calibrated at frequencies up to 1000 Hz with a NIST transformer bridge [4] using working standards, which are calibrated in terms of NIST fused silica 10 pF [5] reference standards. The general calibration procedure is described in [6].

The measured parallel capacitance is the mean of the results of four or more measurements of the "capacitance added" [3,6,7]. Between each measurement, the capacitor is disconnected, rotated 90 degrees around the vertical axis of the connector, and reconnected. The measurements are made with a special three-terminal to two-terminal adapter whose "zero" value to the reference plane is known to within 0.004 pF. The "capacitance added" with this adapter is the capacitance to the reference plane of the connector. If an open-ended termination (with an inner conductor preferably) is supplied and if it is specially requested that the change in capacitance be referenced to the termination, then the change in capacitance is that due to disconnecting the termination and connecting the capacitor [8]. This type of change is probably the most useful to the user since effects due to small dissimilarities between the NIST adapter and the user's adapter will tend to cancel out.

In order to realize the stated uncertainties, the user's adapter and capacitor connectors must be kept in good condition. These must be clean so that proper mating occurs and a uniform radial field is maintained within the connectors. Changes in concentricity, depth of the end of the inner conductors or damage to the leaf contacts can easily change the capacitance values by 0.01 pF or more. The use of any non-precision or different connector with these capacitors virtually will destroy any usefulness of the capacitance value and its uncertainty.

All capacitors must be in the calibration laboratory for 72 hours or more before measurements are performed. The average ambient temperature of the laboratory is 23 °C ± 1 °C with hourly variations of about 0.1 °C. Measurements are not made if the ambient laboratory temperature differed from the set-point by more than 1 °C during the last 24 hours.

The reported value of capacitance is in terms of the NIST representation of the farad. The expanded uncertainties include allowance for both Type A and Type B uncertainties in the chain of calibration measurements, and are assigned to the capacitance values using the coverage factor $k = 2$ [9]. They do not include any components of uncertainty that may be associated with long term instability, temperature hysteresis or changes due to stresses incurred during shipment. In addition, no allowance is made for the variations in the capacitance of unsealed capacitors due to changes in humidity since the magnitude of these variations is dependent upon the surface conditions of the plates. The relative humidity in the laboratory varies but does not exceed 50%.

3. References

[1] R.D. Cutkosky, "New NBS Measurements of the Absolute Farad and Ohm," IEEE Trans. on Instrumentation and Measurements, Vol. IM 23, No. 4, Dec. 1974.

[2] J. Q. Shields, R. F. Dziuba, and H. P. Layer, "New Realization of the Ohm and Farad Using the NBS Calculable Capacitor," IEEE Trans. Instrum. Meas. Vol. 38, No. 2, pp. 249-251, April 1989.

[3] "IEEE Standard for Precision Coaxial Connectors," IEEE Trans. on Instr. Meas., Vol. IM-17, No. 3, pp. 204-218, Sept. 1968.

[4] M. C. McGregor, J. F. Hersh, R. D. Cutkosky, F. K. Harris, and F. R. Kotter, "New Apparatus at the National Bureau of Standards for Absolute Capacitance Measurement," IRE Trans. on Instr., Vol. I-7, No. 3 & 4, pp. 253-261, Dec. 1958.

[5] R. D. Cutkosky and L. H. Lee, "Improved Ten-picofarad Fused Silica Dielectric Capacitor," Jour. of Res. NBS, Vol. 69C, No. 3, July & Sept. 1965.

[6] R. D. Cutkosky, "Capacitance Bridge -- NBS Type 2," National Bureau of Standards Report 7103, March 1961.

[7] J. F. Hersh, "A Close Look at Connection Errors in Capacitance Measurements," General Radio Experimenter, Vol. 33, No. 7, July 1959.

[8] R. W. Orr, "Capacitance Standards with Precision Connectors," General Radio Experimenter, Vol. 41, No. 9, Sept. 1967.

[9] B. N. Taylor and C. E. Kuyatt, "Guidelines for Evaluating and Expressing the Uncertainty of NIST Measurement Results," NIST Tech. Note No. 1297, Jan. 1993.

UNITED STATES DEPARTMENT OF COMMERCE
National Institute of Standards and Technology
Gaithersburg, Maryland 20899-0001

REPORT OF CALIBRATION

Standard Capacitor

General Radio Company
Type 1406-A, Serial No. ####

Submitted by:

Frequency (Hz)	Capacitance (pF)	Expanded Uncertainty (%)
1000	1000.123	60

For additional information regarding the calibration of capacitors of this type at NIST, the user should consult the information sheet(s) enclosed with this report.

Temperature: 23 °C ± 1 °C

Date of Calibration: October 2, 1997

Measurements performed by:

For the Director,

Summerfield B. Tillett
Electricity Division

Barry A. Bell, Group Leader
Electricity Division

Test No. 811/
Reference:
Date: January 6, 1998
Telephone Contact: 301-975-4221

NIST

UNITED STATES DEPARTMENT OF COMMERCE
National Institute of Standards and Technology
Gaithersburg, Maryland 20899-0001

GENERAL INFORMATION ON MICA-DIELECTRIC STANDARD CAPACITORS WITH BINDING POST CONNECTORS

1. Representation of the Unit of Capacitance

As a result of new absolute measurements of the farad in terms of the units of length and time, the legal unit of capacitance was established at NIST/NBS in 1975 [1], and re-established in 1989 [2]. The reported values of capacitance since that time reflect the values assigned to NIST standards used for the maintenance of the legal unit. Since 1989, the difference between the NIST unit, which includes an allowance for possible drift, and the farad is believed to be no greater than ±0.1 ppm.

2. Mica-Dielectric Capacitors with Binding Post Connectors

Two- and three-terminal standard capacitors with plug and binding post connectors are calibrated with a resistance ratio-arm bridge, as described in [3]. This bridge is calibrated with working standards that are calibrated in terms of NIST fused silica 10 pF [4] reference standards.

The measured parallel capacitance and conductance are the means of two or more measurements obtained by connecting the capacitor into the bridge via the binding posts of the terminal plate with the plugs supplied by the customers. If no plugs are supplied, measurements are performed by using standard connectors model GR274. The binding posts of the capacitor are never used for this measurement.

The uncertainty for the measured capacitance contains a 0.01 pF systematic component for binding posts and plate geometry [5]. The measured capacitance of any capacitor with exposed connectors is dependent upon the mechanical and electrical geometry of the connections to the capacitor, the stability of this geometry and of the surroundings [6]. For example, changes in plug type and heights, hole depths, center to center distance of the binding posts can cause changes of 1 pF or more. In some cases, connectors other than binding posts and a plate can cause changes of 0.1 pF or more. In order to realize the stated uncertainty, the user must compare his/her geometry with that used in the calibration of the capacitor and make appropriate calculations and/or measurements for the differences. If this cannot be done, it is reasonable to assume that the addition of 1 pF to the stated uncertainty would be adequate for most geometries.

All capacitors must be in the calibration laboratory for 72 hours or more before measurements are performed. All measurements are made in a laboratory where the temperature control set-point is 23 °C. Measurements are not made if the ambient laboratory temperature differed from the set-point by more than 1 °C during the last 24 hours.

The reported values of capacitance are in terms of the NIST representation of the farad. The capacitance calibration uncertainties are expanded uncertainties and include allowances for both Type A and Type B uncertainties in the chain of calibration measurements, and are assigned to the capacitance values using the coverage factor k=2 [7]. The standard deviation is estimated to be less than 40 ppm for all nominal values and frequencies except for 1000 pF at 66 Hz where it is estimated to be 55 ppm.

The uncertainties of the measured conductances also include both Type A and Type B uncertainties and these are usually of secondary importance. However, it should be mentioned that series resistance in the connections, leads, etc., to the larger nominal capacitance values at the higher frequencies can cause large increases in the measured conductance. Such increases are proportional to the square of the frequency and to the square of the capacitance.

The uncertainties do not include any allowance for long-term instability, temperature hysteresis or changes due to stresses incurred during shipment.

3. References

[1] R.D. Cutkosky, "New NBS Measurements of the Absolute Farad and Ohm," IEEE Trans. on Instrumentation and Measurements, Vol. IM 23, No. 4, Dec. 1974.

[2] J. Q. Shields, R. F. Dziuba, and H. P. Layer, "New Realization of the Ohm and Farad Using the NBS Calculable Capacitor," IEEE Trans. Instrum. Meas. Vol. 38, No. 2, pp. 249-251, April 1989.

[3] W. D. Voelker, "An Improved Capacitance Bridge for Precision Measurements," Bell System Record, Jan. 1942.

[4] R. D. Cutkosky and L. H. Lee, "Improved Ten-picofarad Fused Silica Dielectric Capacitor," Jour. of Res. NBS, Vol. 69C, No. 3, July & Sept. 1965.

[5] J. F. Hersh, "A Close Look at Connection Errors in Capacitance Measurements," General Radio Experimenter, Vol. 33, No. 7, July 1959.

[6] R. D. Cutkosky, "Capacitance Bridge -- NBS Type 2," National Bureau of Standards Report 7103, March 1961.

[7] B. N. Taylor and C. E. Kuyatt, "Guidelines for Evaluating and Expressing the Uncertainty of NIST Measurement Results," NIST Tech. Note No. 1297, Jan. 1993.

UNITED STATES DEPARTMENT OF COMMERCE
National Institute of Standards and Technology
Gaithersburg, Maryland 20899-0001

REPORT OF CALIBRATION

Standard Capacitor

General Radio Company
Type 1409-Y, Serial No. ####

Submitted by:

Type of Measurement	Frequency (Hz)	Capacitance (μF)	Capacitance Uncertainty (%)	Conductance (μS)	Conductance Uncertainty (μS)
2-Terminal	**1000**	**0.99878**	**0.018**	**0.5**	**0.4**

For additional information regarding the calibration of capacitors of this type at NIST, the user should consult the information sheet(s) enclosed with this report.

Temperature: 23° C ± 1° C

Date of Calibration: December 1, 1997

Measurements performed by:

For the Director,

Summerfield B. Tillett
Electricity Division

Barry A. Bell, Group Leader
Electricity Division

Test No. 811/
Reference:
Date: January 5, 1998
Telephone Contact: 301-975-4221

NIST