NIST Measurement Services:

NIST Special Publication 250–45

Radiation Processing Dosimetry Calibration Services: Manual of Calibration Procedures

Jimmy C. Humphreys
James M. Puhl
Stephen M. Seltzer
William L. McLaughlin
Marc F. Desrosiers
Vitaly Y. Nagy
Debra L. Bensen
Marlon L. Walker

U.S. Department of Commerce
Technology Administration
National Institute of Standards and Technology

The National Institute of Standards and Technology was established in 1988 by Congress to "assist industry in the development of technology . . . needed to improve product quality, to modernize manufacturing processes, to ensure product reliability . . . and to facilitate rapid commercialization . . . of products based on new scientific discoveries."

NIST, originally founded as the National Bureau of Standards in 1901, works to strengthen U.S. industry's competitiveness; advance science and engineering; and improve public health, safety, and the environment. One of the agency's basic functions is to develop, maintain, and retain custody of the national standards of measurement, and provide the means and methods for comparing standards used in science, engineering, manufacturing, commerce, industry, and education with the standards adopted or recognized by the Federal Government.

As an agency of the U.S. Commerce Department's Technology Administration, NIST conducts basic and applied research in the physical sciences and engineering, and develops measurement techniques, test methods, standards, and related services. The Institute does generic and precompetitive work on new and advanced technologies. NIST's research facilities are located at Gaithersburg, MD 20899, and at Boulder, CO 80303. Major technical operating units and their principal activities are listed below. For more information contact the Publications and Program Inquiries Desk, 301-975-3058.

Office of the Director
- National Quality Program
- International and Academic Affairs

Technology Services
- Standards Services
- Technology Partnerships
- Measurement Services
- Technology Innovation
- Information Services

Advanced Technology Program
- Economic Assessment
- Information Technology and Applications
- Chemical and Biomedical Technology
- Materials and Manufacturing Technology
- Electronics and Photonics Technology

Manufacturing Extension Partnership Program
- Regional Programs
- National Programs
- Program Development

Electronics and Electrical Engineering Laboratory
- Microelectronics
- Law Enforcement Standards
- Electricity
- Semiconductor Electronics
- Electromagnetic Fields[1]
- Electromagnetic Technology[1]
- Optoelectronics[1]

Chemical Science and Technology Laboratory
- Biotechnology
- Physical and Chemical Properties[2]
- Analytical Chemistry
- Process Measurements
- Surface and Microanalysis Science

Physics Laboratory
- Electron and Optical Physics
- Atomic Physics
- Optical Technology
- Ionizing Radiation
- Time and Frequency[1]
- Quantum Physics[1]

Materials Science and Engineering Laboratory
- Intelligent Processing of Materials
- Ceramics
- Materials Reliability[1]
- Polymers
- Metallurgy
- NIST Center for Neutron Research

Manufacturing Engineering Laboratory
- Precision Engineering
- Automated Production Technology
- Intelligent Systems
- Fabrication Technology
- Manufacturing Systems Integration

Building and Fire Research Laboratory
- Structures
- Building Materials
- Building Environment
- Fire Safety Engineering
- Fire Science

Information Technology Laboratory
- Mathematical and Computational Sciences[2]
- Advanced Network Technologies
- Computer Security
- Information Access and User Interfaces
- High Performance Systems and Services
- Distributed Computing and Information Services
- Software Diagnostics and Conformance Testing

[1] At Boulder, CO 80303.
[2] Some elements at Boulder, CO.

NIST Special Publication 250-45

NIST MEASUREMENT SERVICES:

Radiation Processing Dosimetry Calibration Services: Manual of Calibration Procedures

Jimmy C. Humphreys, James M. Puhl, Stephen M. Seltzer,
William L. McLaughlin, Marc F. Desrosiers, Vitaly Y. Nagy,
Debra L. Bensen, and Marlon L. Walker

Ionizing Radiation Division
Physics Laboratory
National Institute of Standards and Technology
Gaithersburg, MD 20899-0001

March 1998

U.S. Department of Commerce
William M. Daley, Secretary

Technology Administration
Gary R. Bachula, Acting Under Secretary for Technology

National Institute of Standards and Technology
Raymond G. Kammer, Director

National Institute of Standards and Technology Special Publication 250–45
Natl. Inst. Stand. Technol. Spec. Publ. 250–45, 47 pages (Mar. 1998)
CODEN: NSPUE2

U.S. GOVERNMENT PRINTING OFFICE
WASHINGTON: 1998

For sale by the Superintendent of Documents, U.S. Government Printing Office, Washington, DC 20402–9325

TABLE OF CONTENTS

Page

SCOPE 1

REFERENCED DOCUMENTS 1

TERMINOLOGY 1

SIGNIFICANCE AND USE 3

CALIBRATION PROCEDURES 4

MEASUREMENT UNCERTAINTY 24

KEYWORDS 28

REFERENCES 28

APPENDIXES 30

1. Scope

1.1 This document contains detailed descriptions of the procedures used in the high-dose radiation dosimetry calibration services at the National Institute of Standards and Technology (NIST). These services are provided to the radiation processing industry by NIST staff or by personnel employed by an industry trade organization, operating at NIST using NIST calibration facilities, as part of a cooperative research and development agreement (CRADA). NIST staff provide oversight and ensure the quality of the calibration services.

2. Referenced Documents

2.1 *ASTM Standards:*

E 170 Terminology Relating to Radiation Measurements and Dosimetry
E 1249 Practice for Minimizing Dosimetry Errors in Radiation Hardness Testing of Silicon Electronic Devices using Co-60 Sources
E 1250 Method for Application of Ionization Chambers to Assess the Low Energy Gamma Component of Cobalt-60 Irradiators Used in Radiation-Hardness Testing of Silicon Electronic Devices
E 1261 Guide for Selection and Calibration of Dosimetry Systems for Radiation Processing
E 1275 Practice for Use of a Radiochromic Film Dosimetry System
E 1607 Practice for Use of the Alanine-EPR Dosimetry System
E 1707 Guide for Estimating Uncertainties in Dosimetry for Radiation Processing

2.2 *International Organization for Standards:*

ISO/IEC Guide 25 (1990) General requirements for the competence of calibration and testing laboratories

2.3 *American National Standards Institute:*

ANSI/NCSL Z540-1-1994 Calibration Laboratories and Measuring and Test Equipment - General Requirements

2.4 *National Institute of Standards and Technology:*

NIST Special Publication 250-44 High-Dose Radiation Dosimetry Calibration Services and Measurement Assurance Program

3. Terminology

3.1 *Descriptions of Terms Specific to This Document:*

3.1.1 calibration - the process whereby the response of a dosimeter or measuring instrument is characterized through comparison with an appropriate standard that is traceable to, and consistent with, a national standard.

3.1.2 dosimetry system - a system used for determining absorbed dose, consisting of dosimeters, measurement instruments and their associated reference standards, and procedures for the system's use.

NOTE 1 - The types of dosimeters include reference standard dosimeters, transfer standard dosimeters, and routine dosimeters. See Guide E 1261 for guidance on the selection and calibration of the various dosimetry systems.

3.1.3 measurement assurance program - a documented program for the measurement process that quantifies on a continuing basis the overall uncertainty of the measurements. This program requires traceability to and consistency with national or international standards, and shall ensure that the overall uncertainty meets the requirements of the specific application.

3.1.4 measurement traceability - the ability to demonstrate and document periodically that the measurement results from a particular measurement system are in agreement with comparable measurement results obtained with a national standard (or some identifiable and accepted standard) to a specified uncertainty.

3.1.5 primary standard dosimeter - dosimeter, of the highest metrological quality, established and maintained as an absorbed dose standard by a national or international standards organization.

3.1.6 quality assurance - all systematic actions necessary to provide adequate confidence that a calibration or measurement is performed to a predefined level of quality.

3.1.7 quality control - the operational techniques and procedures that are employed routinely to achieve and sustain a predefined level of quality.

3.1.8 quality manual - document stating the quality policy, quality system, and quality practices of an organization.

3.1.9 quality system - organizational structure, responsibilities, procedures, processes, and resources for implementing quality management.

3.1.10 radiation processing - the intentional irradiation of products or materials to preserve, modify, or improve their characteristics.

3.1.11 reference standard dosimeter - a dosimeter, of high metrological quality, used as a standard to provide measurements traceable to, and consistent with, measurements made using primary standard dosimeters.

3.1.12 routine dosimeter - dosimeter calibrated against a primary-, reference-, or transfer-standard dosimeter and used for routine absorbed dose measurement.

3.1.13 transfer standard dosimeter - a dosimeter, often a reference standard dosimeter, suitable for transport between different locations, used to compare absorbed dose measurements.

3.1.14 verification - confirmation by examination of objective evidence that specified requirements have been met.

NOTE 2 - In the case of measuring equipment, the result of verification leads to a decision either to restore to service or to perform adjustments, or to repair, or to downgrade, or to declare obsolete. In all cases it is required that a written trace of the verification performed be kept on the instrument's individual record.

3.1.15 working standard - a standard, usually calibrated against a reference standard, used routinely to calibrate or check measuring instruments or devices.

3.2 Also see Terminology E 170.

4. Significance and Use

4.1 The radiation industry needs a source of reliable, prompt, dosimeter calibration services to support accurate measurements of absorbed dose during radiation processing. Those measurements, made routinely in industrial facilities, should be consistent with and traceable to the physical measurement standards maintained by an appropriate national or international standards laboratory.

4.2 To ensure the provision of adequate services, a calibration laboratory should be operating with a full measurement assurance program (MAP). The fundamental requirements for such a program include: (1) compliance with operational requirements of this document; (2) documented procedures and in-house quality assurance (QA) program specific to the calibration services provided; and (3) periodic performance evaluations, such as review by NIST staff and measurement intercomparisons between national laboratories (**1,2**)[1].

4.3 In addition to standard calibration services such as irradiation of dosimeters and supplying transfer dosimeters for customer in-house source calibration, the calibration laboratory MAP can provide technical information, troubleshooting (at the customer's facility if necessary), and serve as an independent group for resolution of disputes. The MAP can also conduct long term studies of dosimetry system characteristics, such as environmental effects, and evaluate new, emerging dosimetry systems to assist in technology transfer to industry.

4.4 NIST SP250-44 sets forth general criteria that shall be satisfied by the calibration

[1]The bold numbers in parenthesis indicate references at the end of the text.

laboratory. These general criteria are completely consistent with ISO/IEC Guide 25 and its U.S. equivalent ANSI/NCSL Z540-1. Laboratories that meet these general requirements comply, for calibration activities, with Guide 25/Z540 and the relevant requirements of the IS0 9000 series of standards, including those of the model described in IS0 9002 when they are acting as suppliers producing calibration results.

4.5 In addition to the general requirements of ISO/IEC Guide 25/ANSI Z540, NIST SP250-44 contains specific criteria for particular types of ionizing radiation, that is, gamma rays, electron beams and x-ray (bremsstrahlung) beams. It contains the theoretical basis for the traceability of dosimetry measurements used in the calibration services.

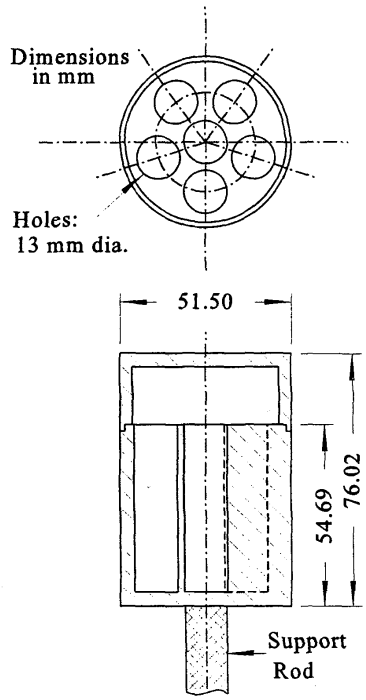

Figure 1 - Five-Hole Cup for Ampoule Irradiation

4.6 This document contains the procedures used in the handling of customer's calibration requests, for the generation of calibration reports (with examples), and in the determination of the uncertainties for the various calibration services.

5. Calibration Procedures

5.1 *Calibration Methods*

5.1.1 The Pool source and Gammacell ^{60}Co gamma-ray irradiators [2], described in detail in NIST SP250-44, are used to calibrate a variety of types of dosimeters including liquid solutions sealed in glass ampoules such as ceric cerous sulfate and dichromate, thin radiochromic solid films, and thick solid slabs such as Red Perspex. Each type of dosimeter requires a unique holder and geometry during irradiation. For the liquid-in-ampoule type, a polystyrene holder was used as shown in Fig. 1. This holder is referred to as the "five-hole cup" since the five circumferential holes are normally used to hold the dosimeters being calibrated and the center hole is used for quality control dosimetry. The hole size was chosen so that a 2-mL ampoule would fit snugly. Red Perspex dosimeters are normally sealed in aluminum pouches by the manufacturer and are not opened until after irradiation. The usual method for handling these during calibration is to fold the pouch tightly around the slab of each dosimeter

[2]The mention of commercial products throughout this document does not imply recommendation or endorsement by the National Institute of Standards and Technology, nor does it imply that the products identified are necessarily the best available for the purpose.

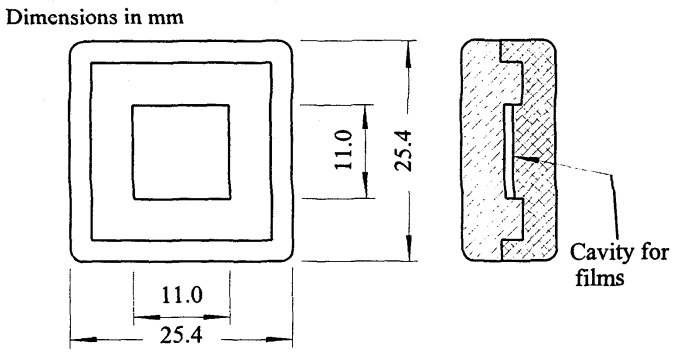

Figure 2 - Holder for Radiochromic Thin Film Irradiation

and place it into the hole of the five-hole cup normally occupied by an ampoule. The radiochromic thin film dosimeters are normally irradiated in polystyrene two-piece square slab holders as shown in Fig. 2. The slab assembly, with several radiochromic films sealed in the interior cavity, is held vertically during irradiation. The dosimeters are held in the various holders or cups described in order to provide reproducible geometries as well as provide approximate electron equilibrium conditions. Electron equilibrium is created when an appropriate thickness of buildup material surrounds the dosimeter so that the incident photon fluence generates a constant secondary electron spectrum. The exact thickness of the buildup material is not very critical. For example, for ^{60}Co gamma rays, a thickness of 3 mm to 5 mm of polystyrene is adequate. The Pool source and Gammacells provide nearly isotropic incident photon fluences. This makes the ratio measurements discussed in Section 7.8 of SP250-44 necessary since the buildup material thickness can not be constant in all directions with practically achievable geometries. The dose rates for all sources and configurations are given in Table 1. The conversion of absorbed dose values in water to dose in silicon was done with the use of ratios of mass energy absorption coefficients.

5.1.2 The liquid-in-ampoules type dosimeters are not sensitive to external environmental effects and require no special preparation before irradiation. The Red Perspex type dosimeters are sealed in an aluminized pouch by the manufacturer to provide a constant relative humidity for the dosimeters. These pouches must remain intact until after irradiation for the dosimeters to perform properly. The FWT radiochromic thin film dosimeters are sensitive to humidity and must be conditioned at a relative humidity of approximately 45% to 50% for at least 16 h then sealed in aluminized trilaminate pouches before irradiation.

5.1.3 Nearly all dosimeters are sensitive to temperature during irradiation to some extent. It is important to know that temperature so as to be able to apply a correction factor if necessary. Even more desirable is to be able control the temperature during irradiation. The temperature in GC-232 Gammacell can reach 50 °C if not controlled. A Turbo-Jet gas cooling system is used to maintain the temperature of the dosimeters and holders at 23 °C during all irradiation.

Table 1
Dose Rates for ^{60}Co Sources for December 31, 1996

filename = B140 P5-90 c:\qpw\DR97c.WB1
Effective 3/1/97
Co-60 half-life value is adjusted from 1925.34 days to 1925.12 days

Domen Water Calorimeter Transfer Calibration	
Source in B036 under 5 cm water at 100 cm source	
for 14.5 cm by 14.5 cm field size	
For 1/11/90 Dose rate =	1.8144 Gy/min
For 12/31/96 Elapsed time =	2546 days
Co-60 daily decay constant (ln2 / 1925.12) =	3.60054e-04
Decay correction factor =	0.399837
Dose rate =	0.72546 Gy/min
or	0.012091 Gy/s

		Absorbed Dose Rate in Water		
GC232	Ratio	Gy/s	Gy/min	kGy/h
3.5 mm Single-hole vial geometry	248.6	3.005	180.3	10.82
5.0 mm Polystyrene Film Block Geometry	0.9870	2.966	178.0	10.68
4.2 mm polystyrene 5-hole cup Perspex Geometry	0.9710	2.918	175.1	10.51
4.2 mm polystyrene 5-hole cup Ampoule Geometry	0.9560	2.873	172.4	10.34
GC232 in Stainless Steel Dewar				
3.5 mm Single-hole vial geometry	239.9	2.901	174.0	10.44
5.0 mm Polystyrene Film Block Geometry	0.9913	2.875	172.5	10.35
4.2 mm polystyrene 5-hole cup Perspex Geometry	0.9692	2.811	168.7	10.12
4.2 mm polystyrene 5-hole cup Ampoule Geometry	0.9599	2.784	167.1	10.02
GC45				
3.5 mm Single-hole vial geometry	75.18	0.9090	54.54	3.272
5.0 mm Polystyrene Film Block Geometry	0.9889	0.8989	53.93	3.236
4.2 mm polystyrene 5-hole cup Perspex Geometry	0.9730	0.8844	53.07	3.184
4.2 mm polystyrene 5-hole cup Ampoule Geometry	0.9595	0.8722	52.33	3.140
F101 Pool Source				
3.5 mm Single-hole vial geometry	26.85	0.3246	19.48	1.169
5.0 mm Polystyrene Film Block Geometry	0.9941	0.3227	19.36	1.162
4.2 mm polystyrene 5-hole cup Perspex Geometry	0.9883	0.3208	19.25	1.155
4.2 mm polystyrene 5-hole cup Ampoule Geometry	0.9749	0.3164	18.99	1.139

for Gammacell and Pool, Combined Relative Expanded Uncertainty = 1.8%; dose rate (Silicon) = dose rate (Water) * 0.913

elapsed time = 366 days, decay correction factor = 0.876534

B036 Co-60 Vertical Beam	Geometry	Gy/s	Gy/min	Gy/h
B036 s.d.=30.0 cm, coll=20 x 20	6 mm ps plate	2.676e-02	1.605e+00	96.32
B036 s.d.=41.6 cm, coll=20 x 20	6 mm ps plate	1.944e-02	1.167e+00	70.00
B036 s.d.=105 cm, coll=20 x 20	6 mm ps plate	6.227e-03	3.736e-01	22.42
B034 Co-60 Vertical Beam				
B034 s.d.=15.0 cm, coll.= 25 x 25	6 mm ps plate	5.306e-03	3.184e-01	19.10
B034 s.d.=100 cm, coll.= 25 x 25	6 mm ps plate	9.476e-04	5.685e-02	3.411
B034 s.d.=130 cm, coll.= 25 x 25	6 mm ps plate	6.568e-04	3.941e-02	2.364

for vertical beams, Combined Relative Expanded Uncertainty = 2.2%; dose rate (Silicon) = dose rate (Water) * 0.896

5.2 *Quality Control Procedures*

5.2.1 Calibrated NIST radiochromic thin film dosimeters are used for quality control (QC) during irradiation of customer-supplied radiochromic thin film dosimeters. The procedures are as follows:

5.2.1.1 A new batch of radiochromic dosimeters is calibrated by irradiation to various absorbed dose values over the dose range of interest. For example, for a range of 1 kGy to 50 kGy, 10 dose points might be used, with 5 dosimeters irradiated at each dose value. Each dosimeter film is marked with a code to maintain its identity through all subsequent operations. All dosimeters are analyzed (read out) before irradiation as well as after irradiation. After the pre-irradiation analysis, the dosimeters are stored under controlled humidity conditions of 45% to 50% R.H. for at least 16 h to allow for equilibration of the water content of the films. Five films are stacked, with a thin black polyethylene square on the top and bottom of the stack, and placed in the polystyrene block assembly shown in Fig. 2. The black polyethylene squares are needed because experimental evidence indicates an over response of the top and bottom films in the stack, probably a result of fluorescence from the polystyrene during irradiation. The polystyrene block assembly is then heat sealed in a trilaminate pouch (a polyethylene layer inside, then a thin aluminum sheet, then a Mylar layer outside) in the controlled humidity environment. Each sealed block assembly is irradiated to a specific dose value in one of the NIST ^{60}Co irradiators with the block held in a reproducible position in the center of the source array geometry. After a storage time of at least 16 h, the dosimeters are analyzed and the results provide a calibration of that batch of radiochromic films (see 5.3 for details on the analysis and data reduction procedures). The remainder of the unirradiated batch may be used for QC during irradiation of customer-supplied dosimeters.

5.2.1.2 Unirradiated QC dosimeters are analyzed before irradiation and then stored, along with the customer-supplied dosimeters, in the 45% to 50% R.H. environment for at least 16 h. A stack of customer dosimeters (a maximum of five) and three QC dosimeters are placed in the polystyrene block assembly and sealed in the laminated pouch as described in 5.2.1.1.

5.2.1.3 The sealed block assembly is irradiated to the specified absorbed dose in one of the NIST ^{60}Co irradiators and stored for at least 16 h (overnight) to allow for full development of the film response. The pouch is opened, the films removed and the NIST QC films separated from the customer's films. The QC films are then analyzed and the indicated dose values are compared with the target dose. If the results are within the specified control limits (discussed in Section 7) then the irradiation is considered satisfactory. If the results are outside the control limits then the irradiation must be investigated and appropriate corrective action taken. All QC results are recorded as part of the calibration report and test folder.

5.2.2 Calibrated alanine pellets are used for QC for all irradiations that do not involve radiochromic thin films. The procedures are as follows:

5.2.2.1 A batch of NIST-fabricated alanine dosimeter pellets is produced as described in detail in section 7.8 of NIST SP 250-44. The dosimeters are sorted by height and those in the range of 2.5 mm to 2.7 mm are used for subsequent dosimetry measurements. The variation in mass of these pellets is about 2.2 %. Bruker-fabricated pellets may also be employed; these have a mass variation of about 1.7 %. The new alanine batch is calibrated in a manner similar to that used for radiochromic films discussed in 5.2.1. The differences in the procedures are that the alanine dosimeters do not require humidity equilibration (after the initial conditioning during fabrication) or sealing, and the alanine dosimeters are calibration over two dose ranges. The Low Dose range extends from 10 Gy to 2 kGy; the High Dose range extends from 1 kGy to 100 kGy (or higher). The alanine pellets are irradiated in the single-hole cup shown in Fig. 9 of NIST SP 250-44 during calibration. Five pellets are placed in the hole and irradiated for each dose value required. Five dose points are used per decade of dose. The dosimeters are analyzed and the calibration response functions are determined as described in 5.3.

5.2.2.2 Unirradiated alanine dosimeters from the calibrated batch are used to monitor the dose received by customer's dosimeters of various types such as Red Perspex, ceric cerous ampoules, and dichromate ampoules. Three alanine pellets are placed in a polystyrene cylinder the same size as the liquid dosimeter ampoule; the cylinder is placed in the center hole of the five-hole cup shown in Fig. 1 and the customer's dosimeter ampoules are placed the outer five holes. The assembly is irradiated to the required dose and the QC alanine dosimeters are analyzed according to the procedures given in 5.3. The indicated dose values are compared with the target dose. If the results are within the specified control limits (discussed in Section 7) then the irradiation is considered satisfactory. If the results are outside the control limits then the irradiation must be investigated and appropriate corrective action taken. All QC results are recorded as part of the calibration report and test folder.

5.3 *Dosimeter Analysis Procedures*

5.3.1 *Radiochromic Film Analysis*

5.3.1.1 Analysis (read out) of the radiochromic thin film dosimeters is done with a Cary model 3e spectrophotometer. Read out of each film is performed both before and after irradiation. The read out procedures is as follows:

(a) Turn on power to control computer (Compac 386), go to Windows, run the Cary software program (indicated by the Cary 13e icon) in a DOS window so that the DOS Editor can be used in another window.

(b) Turn on power to Cary 3e spectrophotometer; let it warm up for at least one hour. The Cary software starts diagnostic checks of the instrument by turning on the UV lamp and scanning for the emission line 656.1 nm to calibrate the wavelength scale.

(c) The computer program boots up with operating parameters set up to read

FWT-60-00 radiochromic films. The parameters are shown in Table 2.

(d) Run a baseline to zero the instrument over the wavelength range 610 nm to 500 nm with empty film holders in both reference (rear) and sample (front) light beams in the sample compartment. The split holder shown in Fig. 3 is used to hold a FWT-60-00 film in the sample light beam. A solid (non-split) version of the holder masks the reference beam exactly the same as the split holder masks the sample beam.

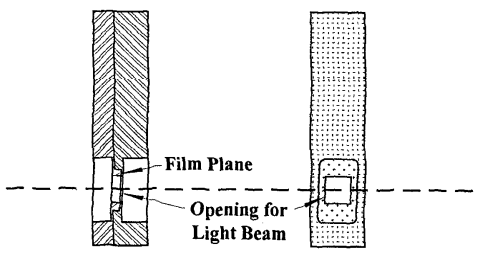

Figure 3 - Radiochromic Film Holder

(e) Handle films with tweezers at the corners to avoid scratching near the center where the light beam passes through. Number each film in a corner with a small code number using a fine permanent marker pen.

(f) Place the film in the split holder and place the holder in the sample holder in the spectrophotometer sample compartment. Read the absorbance values at 605 nm and 510 nm.

(g) The absorbance data is acquired by means of a software program called WLPG.ADL. This program is listed in Appendix 1. To start this program, go to the Calculator page in the Cary software. Start the WLPG program. This initiates Reports Display. As each film is read out in turn a data set is generated on the monitor screen as shown in the example in Table 3.

(h) Upon exiting the WLPG.ADL program, it takes you to the DOS Editor. This pulls up the current.rep file where the film absorbance data colected above is stored. Edit the data to delete the column text headers to leave numerical data only. Save as new file name, e.g., test folder number (hd9616), with an extension of .A1 for pre-irradiation data, or an extension of .A2 for post-irradiation data.

5.3.1.2 The thickness of each FWT-60-00 film is measured in order to be able to normalize the absorbance data to unit thickness. The thickness is measured as follows:

(a) Power to the Mitutoyo electronic thickness gauge (bottom unit) should be left on at all times to minimize warmup drift. If started from power-off mode, allow at least one hour warmup time. Turn on power to Mitutoyo Multiplexer (top unit) and set all switches to up position. The gauge unit data is routed through the Multiplexer unit into the serial port on the Compac 386 control computer as an ASCII string. The gauge unit display should read in "mm" with a resolution of 0.1 μm (the resolution may be changed with a rotary switch on the rear of the gauge unit).

the rear of the gauge unit).

(b) The film thickness is measured with a cartridge head connected to the electronic gauge unit; the head is mounted on a rigid gauge stand. The cartridge plunger tip is raised and lowered onto the stand anvil by a hand-operated vacuum plunger attached to the cartridge. To check the "zero" of the unit initially, lift the tip, place a piece of clean lens paper under it, lowering the tip onto the anvil, then pulling the lens paper out. This removes any dirt on the tip or anvil. Raise and lower the tip several times and reset the zero if necessary with the control knobs on the front of the gauge unit. Repeat this procedure until a stable zero reading is obtained.

Table 2
Cary 3e Spectrophotometer Parameters

Method Name	Routine FWT-60-00
Photometric Mode	Absorbance
Ordinate (Y) Min. / Max.	0.0000 / 4.0000
Abscissa (X) Min. / Max.	500.00 / 610.00
Spectral Bandwidth (nm)	4.0
Signal Averaging Time (s)	1.000
Data Interval (s)	1.000
Wavelength Scan Rate (nm/min)	60.000
Lamps On	Visible
Baseline Correction	On
Auto Scaling	Yes
Auto Store Data	No
Auto Store Report	Yes

Table 3
Sample Data from Film Readout

Film ID	A @ 605 nm	A @ 510 nm
1	2.8137	0.4158
2	1.6882	0.2494
3	0.8441	0.1247

(c) Go into the Film Thickness program from the icon in the main Windows display. This is a DOS Basic program called thread.bas; see the print out of the program in Appendix 2. This program provides prompts on the monitor to step the operator through the thickness measurement process to ensure reliable data. The process is as follows:

(1) A prompt asks for the starting film number;

(2) Take a "zero" reading with no film. If a stable zero is indicated, then a film reading is requested;

(3) Raise the cartridge tip and place the first film on the anvil under the tip. The program reads the thickness once a second. If the same reading is recorded on consecutive reading, the program accepts the data, beeps to alert the operator, and outputs the data to the printer. The program then advances the film number counter and waits to read zero again. The program runs in background while the absorbance measurements are being made with the spectrophotometer. Thus, the thickness of a given film can be measured immediately after the absorbance is measured.

(4) When all films thicknesses are measured, the program prompts the operator to hit the space bar and four options are given:
Save file and quit;
Reset film counter;
Continue;
Quit.
The usual choice is to save the file and quit. The file is saved temporarily In "thread.t". The program asks for another file name (e.g., test.t). After saving the file, the program checks to see if it is a duplicate. Then the program asks if the operator wants to check the file; if "Yes," then it goes to the DOS Editor.

(5) After exiting the Film Thickness program, the computer returns to DOS Basic.

5.3.1.3 The radiochromic film analysis data is reduced by importing the absorbance and thicknesses data into a Quattro Pro spreadsheet. The response is calculated by the formula (A2-A1)/T. A software program called TableCurve is used to calculate dose. Once the calibration plot is fitted, the doses for can be determined by using the program option [Evaluate] , selecting [X = Root at Y], and putting in the values of the response (Y). An example of that calibration data and the fitted response curve is shown in Fig. 4. The fitted polynomial equation is $y = a + bx + cx^2 + dx^3$; the fitted parameters are: a= 0.6290; b= 1.7013; c= -0.0100; d= 2.6729.

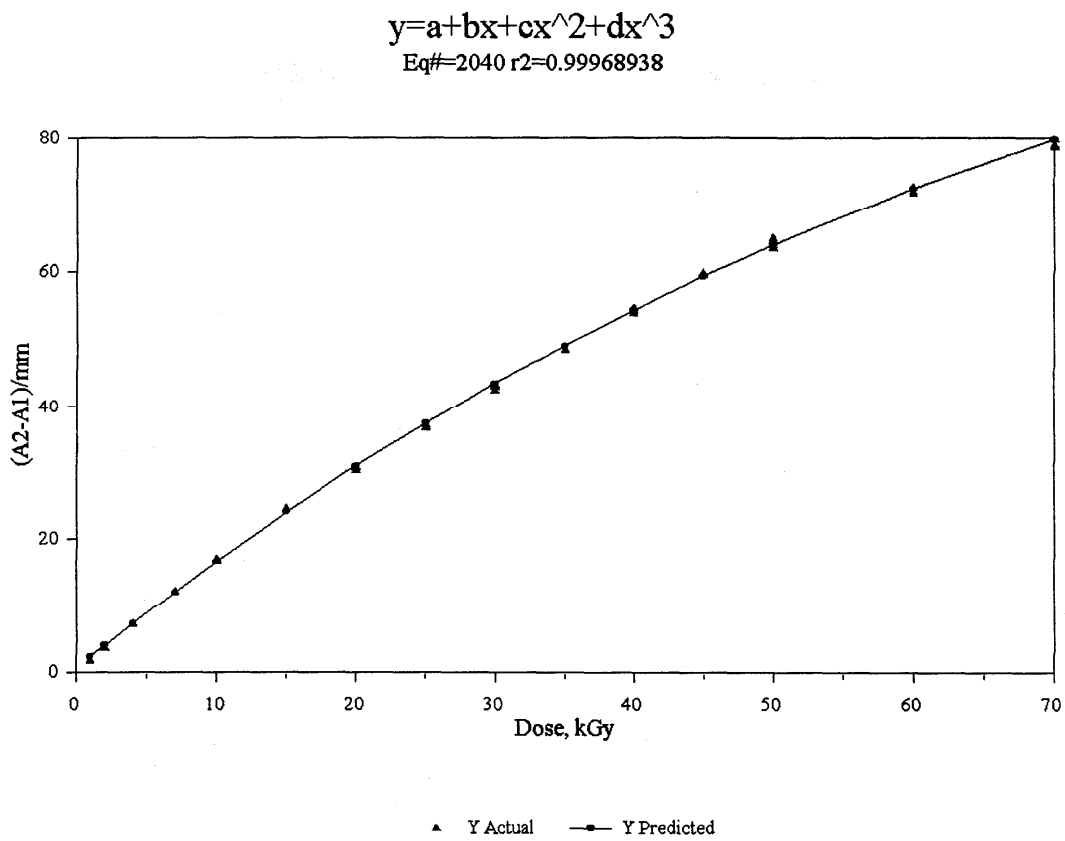

5.3.2 *Alanine Dosimeter Analysis*

5.3.2.1 Analysis (read out) of the alanine dosimeter pellets is done with a Bruker model ESC 106 electron paramagnetic resonance (EPR) spectrometer. The spectrometer is used with a model TM9222 microwave resonant cavity (Fig. 5). The procedure consists of three stages: preparation; signal measurements; and data analysis.

5.3.2.2 *Preparation*

(a) Choose an optimal time for the measurements (**3**). This depends on the dose range:

10 Gy to 100 Gy	12 or more hours after irradiation
0.1 kGy to 25 kGy	48 h to 100 h after irradiation
25 kGy to 100 kGy	48 h to 72 h after irradiation

Calibration and test pellets must be irradiated approximately simultaneously.

(b) After irradiation, each alanine pellet is marked on top with an identification number with a permanent ink pen. The mass of each pellet is measured before EPR analysis with a Denver Instrument Company model 160 electronic balance to the nearest 0.1 mg. Program "a160" on COMPAQ386/25e can be used for automatic input of the masses into the computer.

The process is as follows: Put in a plastic sample tray and tare the balance. Go into the A160 program from the icon in the main Windows display. This is a DOS Basic program called a160.bas; see the print out of the program in Appendix 3.

(1) A prompt asks for the starting pellet number; then it generates a file name to store the data and waits for the user to accept the name.

(2) The program looks for a "zero" reading. If a stable zero is indicated, then the program begins reading the sample mass.

(3) The program makes continuous mass measurements and increments a seconds counter. If the mass value drifts, the counter is reset to zero. If the value remains unchanged for ten seconds, the value is accepted. The program beeps twice.

(4) The program then waits for a stable zero reading to indicate the sample is being changed and the zero has not drifted. If the balance goes to zero and remains for two seconds, the program will beep once to indicate it ready to read the next sample. If the balance settles somewhere beyond zero, the user must press tare.

(5) When all pellets are measured, the program prompts the operator to hit any key. Two choices are given: Q to quit or B to stay in basic. The usual choice is Q.

(c) Log in in the EPR Logbook. This records details of the user, time of use, sample, etc.

(d) Turn on cooling water to the spectrometer magnet using the blue flat control valve on the pipeline behind the magnet. No other controls of the water system should be touched. Adjust the water pressure to about 40 psi, if required.

(e) Turn on the magnet power. The switch is on the bottom front of the magnet. Turn on the control console red power switch located on the top right of the electronics rack behind the console glass door.

(f) On the prompt of the control computer, put in User Profile name. This entails specifying the directory where acquired data is stored or creating such a directory if it does not exist. For example, the directory could be called "hø/alanine." The User Profile should also include the appropriate calibration file. If the operator does not specify a predefined user profile, the spectrometer must be calibrated manually using Calibration (c) option in the main menu; the name of the calibration file selected from the list must match the specification on the front wall of the cavity.

(g) If a sample tube is not in the microwave cavity, place it there. Make sure the correct size Teflon collets (see Fig. 5) are used to mount the chosen sample tube (normally, a collet of a smaller inner diameter is needed to support the tube from beneath). The tube must be held

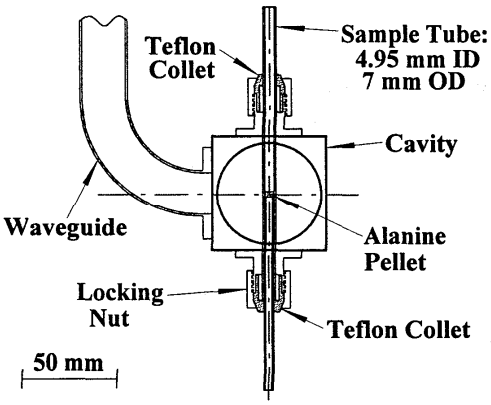

Figure 5 - Bruker Microwave Cavity

firmly enough to preclude any swinging, yet allow its rotation. It must be in the lowest attainable position in the cavity with its horizontal surface in contact with the lower collet.

(h) Place one of the alanine pellets into the sample tube in the cavity. Pellets are inserted into and removed from the sample tube with a vacuum pickup tool.

(I) Press the F3 function key, then the right cursor arrow in the lower row of the cursor key panel to switch to the Tune mode. If there is no dip observable in the display, adjust the frequency to center the dip by means of knob 1 on the knob control.

(j) Press the Page-Up key to initiate the auto-tune procedure. After the systems returns to the "Operate" mode, decrease the microwave attenuation to 7 dB by pressing the right of the two 'Home' keys (the attenuation value is displayed in the second line of the right half of the upper window). Then, press the (→‖←) key to start the fine-tune procedure. Leave the instrument working for at least 30 mins.

(k) Press F3 to activate the main menu and load an appropriate automation routine, such as "replmeas.cmd" by using "Acquisition (A)" / "Automation Editor (L)" option.

(l) Load an appropriate parameter or spectrum file by pressing F (File) and then J (Directory of Parameter Files) or I (Directory of Spectrum Files). Directory *h0:/alanine/templates* contains a number of files with predefined parameters for Bruker and NIST pellets irradiated to various doses.

(m) Create an Excel spreadsheet for the measurement data by copying and adjusting the file "template.xls". Copy the measured masses of pellets into it either manually or by opening the file created by program "a160" as a new Excel worksheet (comma delimited).

5.3.2.3 *Signal Measurements*

(a) Put a pellet into the sample tube in the cavity by means of the vacuum pickup tool.

(b) If the pellet has been irradiated to a new dose, adjust the receiver gain. On a page containing the chosen set of parameters (transferred from a previous recording or read from a template file), make a trial spectrum acquisition (Acquisition (A), Signal Channel (C)) and, if necessary, change the gain using menu option Parameters (P) / Signal Channel Parameters (C). The optimal receiver gain provides a signal that does not exceed the receiver gain gauge and, at the same time, provides 5-digit readings of the derivative minimum and maximum values. In some low-dose measurements, the 5-digit result is not practical. In that case just get as much signal as possible without exceeding the receiver gain gauge.

(c) Select a page with appropriate parameters and start the automation routine using menu option Acquisition (A) / Execute automation routine (E). It will automatically record the spectra of both alanine and ruby, and then transfer the parameter of the alanine spectrum to the next available page.

(d) Rotate the sample tube by 90 degrees and start the routine again.

(e) Measure the signal intensities on the last four pages using menu option Data Handling (D) / Pick Picking (D) / Find Extremal Values (M). In each case, transfer the absolute values of the readings "Min" and "Max" in the bottom of the screen to the spreadsheet.

(f) Repeat this section until all samples are measured.

5.3.2.4 *Data Processing*

(a) In the spreadsheet, calculate the alanine response (S) using the formula: S= averaged alanine signal amplitude / averaged ruby signal amplitude / receiver gain / pellet mass. Where appropriate, make response adjustments to the difference between the temperatures during irradiation of calibration and test pellets. The response increases with temperature at a rate of 0.15%/deg C.

(b) Dose interpretation of the response of each alanine dosimeter is by means of the calibration response functions discussed in 5.2.2.1. The <u>Low Dose</u> range (10 Gy to 2 kGy) response function is linear. The fitted <u>Low Dose</u> least squares curve for a typical alanine batch is shown in Fig. 6. The fitted linear equation is y = a + bx; the fitted parameters in this case are: a = 1.0448; and b = 0.17522. The <u>High Dose</u> range response function is nonlinear; a fitted curve is shown in Fig. 7. The fitted equation is:

$$S = a\left|1 - \exp^{-\left(\frac{D+c}{b}\right)}\right|$$

where S = the normalized EPR signal ; D = absorbed dose, in kGy;
and typical fitted parameters are: a = 10.3943; b = 72. 2446; c = 0.243093.

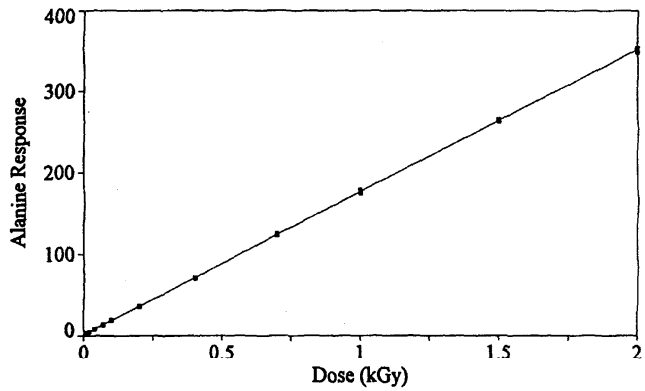

Figure 6 - Alanine Batch 9b Low Dose Calibration Curve

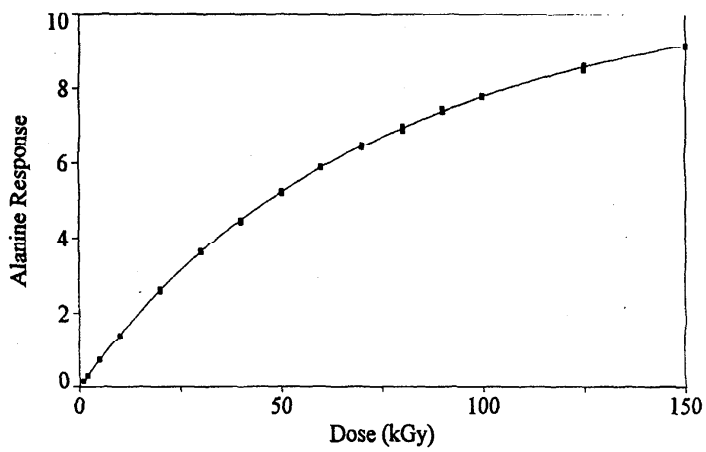

Figure 7 - Alanine Batch 9b High Dose Calibration Curve

(c) A software program called TableCurve is used to fit the data sets for both the Low Dose and High Dose ranges. Once the calibration plot is fitted, the doses for test pellets can be determined by using the program option [Evaluate] , selecting[X = Root at Y], and putting in the values of the normalized signals (Y).

(d) If doses in a material other than water is desired, multiply the determined doses by μ_{en} ratios (material/water) weighted over the calibration source energy spectrum.

5.4 *Handling of Calibration Requests*

5.4.1 The process for calibration of customer-supplied dosimeters is shown schematically in the flowcharts in Figs. 8a and 8b. These show the various administrative levels involved and the documents and actions required to complete a calibration. The steps in the process (with step numbers keyed to those in the flowchart) are as follows:

(1) The customer request a calibration or information;

(2) A fee schedule is supplied to the customer (an example is shown in Appendix 4);

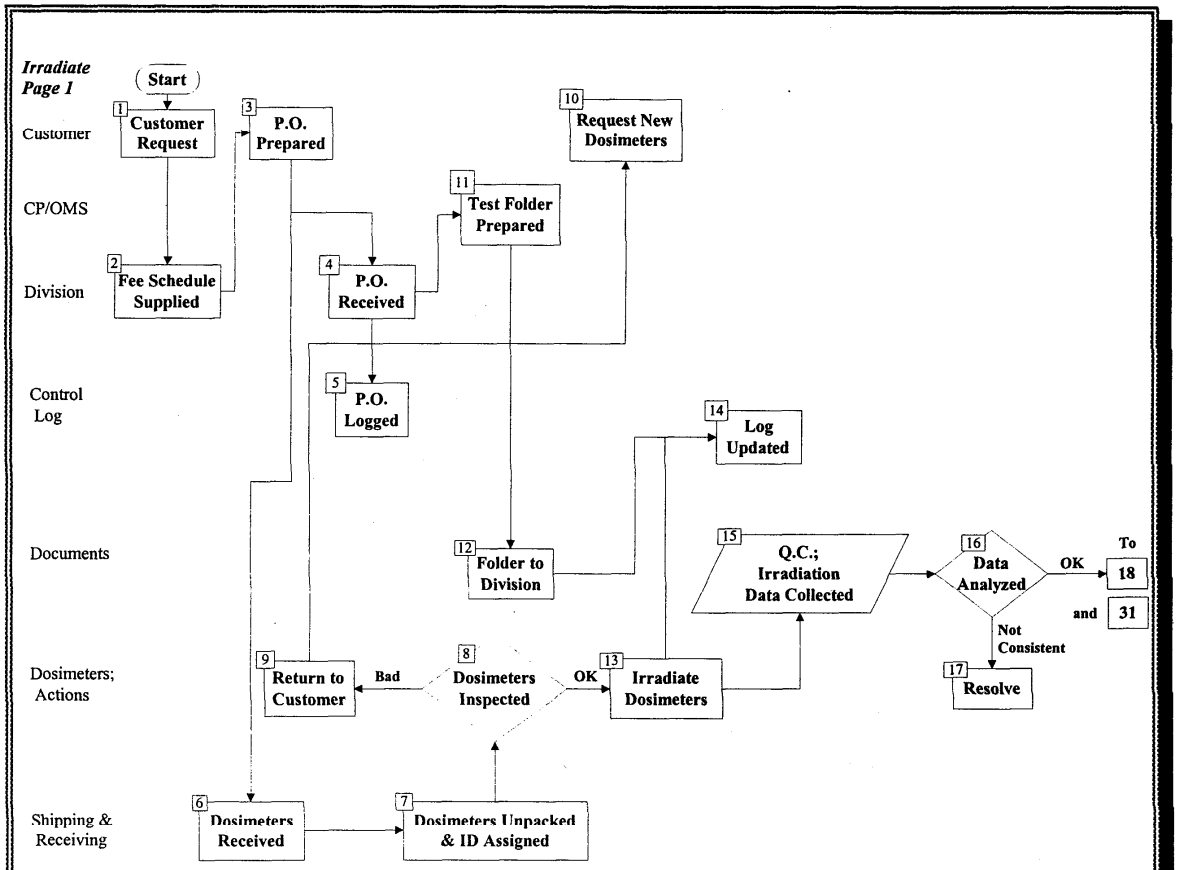

Figure 8a - Procedures for Calibration Irradiations of Customer-Supplied Dosimeters

(3) The customer prepares a purchase order and returns it;

(4) Upon receipt of the hard copy of the purchase order, it is logged in the Control Log

(5) And a copy sent to the Calibration Program/Office of Measurement Services (CP/OMS) for that office to generate a Test Folder (11);

(6) Customer's dosimeters are received in the Division; note that no calibration work is done past this step until a hard copy of the purchase order is in hand;

(7) The dosimeters are unpacked and appropriately tagged for identification throughout the calibration process;

(8) The dosimeters are visually inspected for damage or flaws;

(9) If the dosimeters are flawed in any way that would prevent proper calibration they are returned to the customer with an explanation;

(10) The customer is requested to supply new dosimeters; if the customer complies, the dosimeters are processed from step (6) on again;

(11) The Test Folder generated by the CP/OMS office is sent to the Division;

(12) The Test Folder is received by the Division;

(13) If the dosimeters are considered to be satisfactory in step (8), then they are irradiated to the requested doses;

(14) The Control Log is updated with the Test Folder information and the irradiation data (i.e., irradiation source used, date and time of irradiation, dosimeter(s) ID, temperature during irradiation, dose rate, etc.);

(15) The NIST quality control dosimeters irradiated along with the customer's dosimeters are analyzed and that data and the irradiation data are recorded;

(16) The QC and irradiation data are examined and analyzed;

(17) If the QC data is not consistent with the irradiation data (i.e., the indicated dose is different from the expected dose), then the problem must be resolved;

(18) If the QC data is satisfactory (i.e., within control dose limits) then it is recorded in the Control Log;

(19) The data is used to prepare the Calibration Report;

(20) The customer's dosimeters are ready to be shipped back;

(21) The dosimeters are packed appropriately;

(22) The dosimeters are shipped back to the customer by the requested method; this information is recorded in the Control Log;

(23) The dosimeters are received by the customer;

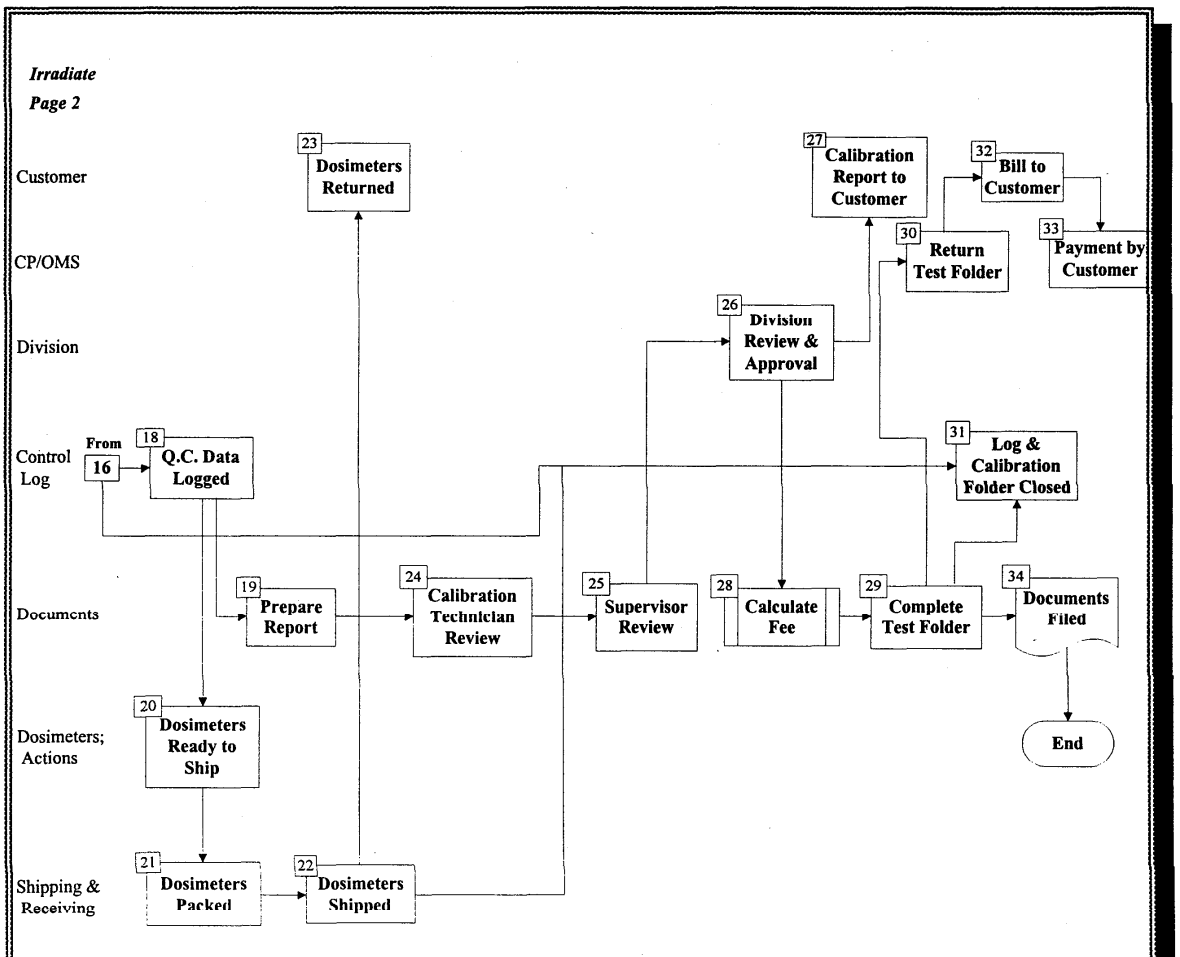

Figure 8b - Procedures for Calibration Irradiations of Customer-Supplied Dosimeters

(24) The completed Calibration Report is reviewed by the Calibration Technician (i.e., the person that did the calibrations);

(25) The Group Leader reviews the Calibration Report and if approved;

(26) The Calibration Report is reviewed by the Division Chief and if approved;

(27) The Calibration Report is sent to the customer;

(28) The calibration fees are calculated by the Calibration Technician;

(29) The Test Folder is completed with the calibration fees;

(30) The Test Folder is returned to the CP/OMS office;

(31) The Control Log is updated with the QC data from step (16) and the date of completion of the Test Folder;

(32) The CP/OMS office sends a bill to the customer;

(33) The customer makes payment to the CP/OMS office;

(34) All documents within the Division are filed; the calibration process is completed.

5.4.2 The process for the supply of NIST transfer dosimeters to a customer for irradiation in the customer's in-house radiation facility is shown schematically in Fig. 9a and 9b. The steps in generating the paper work (i.e., P.O., Test Folder, Control Log updates, etc.) are essentially the same as for the process when customer-supplied dosimeters are calibrated. The real difference is that NIST-supplied transfer standard dosimeters are sent to the customer. These dosimeters may

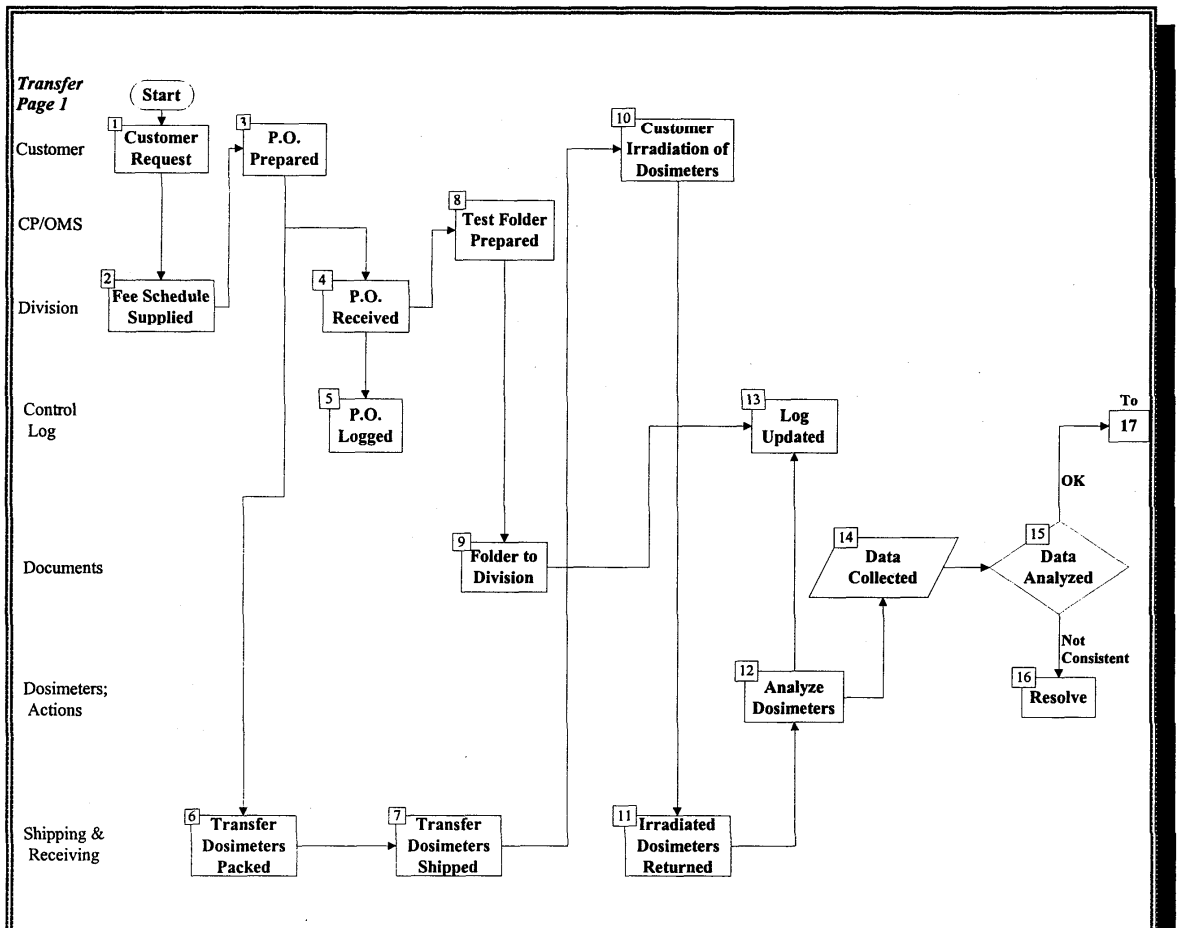

Figure 9a - Procedures for NIST-Supplied Transfer Dosimeters for Customer Irradiation

be alanine pellets or radiochromic films, as requested by the customer. However, it is generally recommended that alanine pellets be used because of the wider dose range, lack of known dose rate effect, and better precision and stability of that dosimetry system. The steps in the process of using transfer dosimeters will not be listed in the detail given in 5.4.1 for the irradiation of customer dosimeters because of the redundancy in many steps. Only those areas where the procedures are different will be discussed.

(1) to (5) Steps are the same as in 5.4.1;

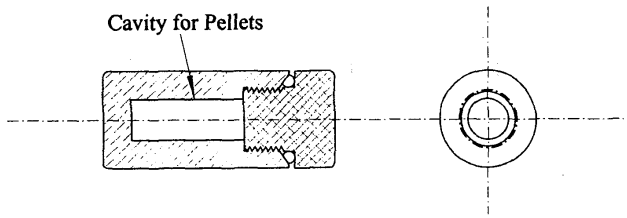

Figure 10 - Polystyrene Alanine Capsule for Co^{60} Gamma Irradiation

(6) Alanine pellets are supplied in an appropriate package depending on whether intended for Co^{60} gamma-ray irradiation or electron-beam irradiation. For Co^{60} gammas, the capsule shown in Fig. 10 is supplied; for electron beams, the flat holder shown in Fig. 11 is supplied. For radiochromic films, the slab holder shown in Fig. 2 is supplied for either gamma or electron beam irradiation.

(7) Packaged transfer dosimeters, including control dosimeters, are shipped to the customer. Instructions are included on suggested dosimeter handling techniques and information on irradiation conditions required for correct data interpretation (see an example in Appendix 5).

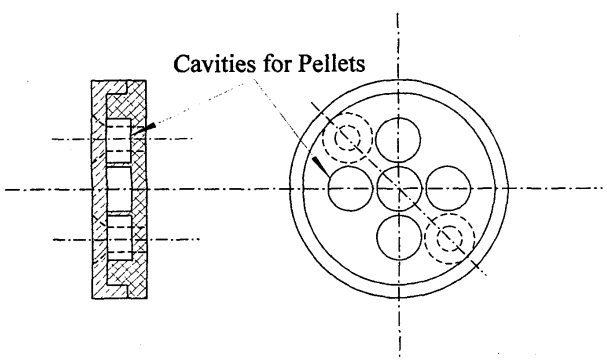

Figure 11 - Polystyrene Alanine Pellet Holder for Electron Beam Irradiations

(8) to (9) Same as in 5.4.1;

(10) Irradiation of dosimeters by customer with in-house source;

(11) Irradiated dosimeters, along with unirradiated controls, are returned to NIST;

(12) Dosimeters are analyzed;

(13) Control Log is updated from both test folder and data from irradiation of dosimeters;

(14) Dosimeter readout data is collected;

(15) Data analysis is performed;

(16) If data is not consistent, i.e., indicated dose values from dosimeters are different from expected doses reported from the customer, than the results must be resolved. This may

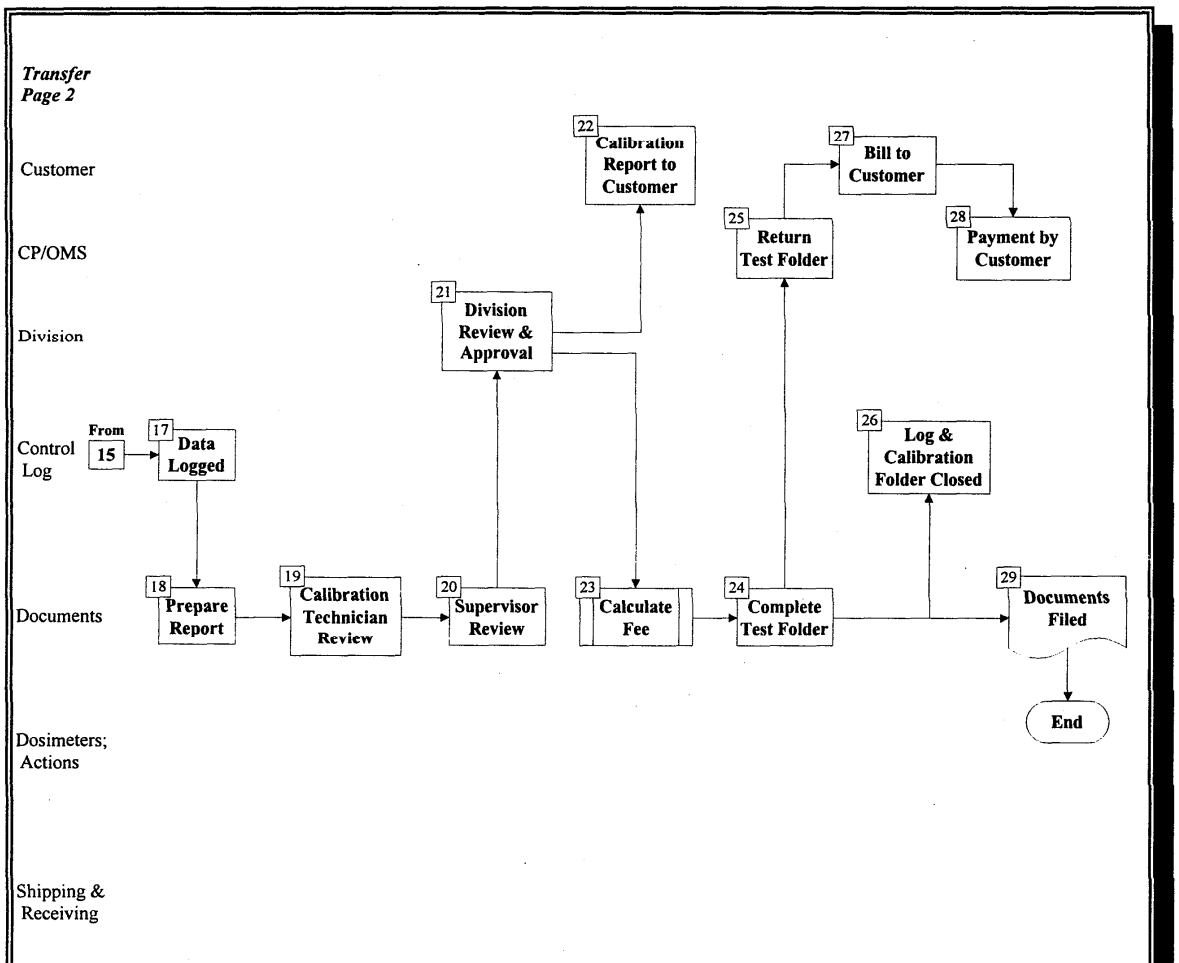

Figure 9b - Procedures for NIST-Supplied Transfer Dosimeters for Customer Irradiation

require another set of dosimeters being irradiated by the customer;

(17) to (29) All subsequent steps are the same as in 5.4.1.

5.5 *Calibration Reports*

5.5.1 The requirements for content and format of calibration reports to be sent to customers are covered in NIST SP250-44. Examples of both types, i.e., for NIST calibration irradiation of customer-supplied dosimeters and NIST transfer dosimeters supplied for customer irradiation, are shown in Appendix 6.

6. Measurement Uncertainty

6.1 To be meaningful, a measurement shall be accompanied by an estimate of uncertainty. Components of uncertainty shall be identified as belonging to one of two groups:

a) components based on the statistical analysis of a series of observations or
b) components based on other methods of analyses.

Additional information is given in ASTM Guide E 1707 and references **4** and **5**, where these components are referred to as Type A and Type B, respectively. In reporting uncertainty, other classifications such as precision and bias may be useful.

NOTE 3 - The identification of Type A and Type B uncertainties in this document uses the methodology adopted in 1993 by the International Organization for Standardization (ISO) for estimating uncertainty. This is different from the way that uncertainty has been traditionally expressed in terms of "precision" and "bias," where precision is a measure of the extent to which replicate measurements made under specific conditions are in agreement, and bias is a systematic error. The purpose of using the method of expressing uncertainties as Type A and Type B recommended in the ISO *Guide to the Expression of Uncertainty in Measurement* (**5**) is to promote an understanding of how uncertainty statements are arrived at and to provide a basis for the international comparison of measurement results.

NOTE 4 - ASTM Guide E 1707 defines possible sources of error in dosimetry performed in radiation processing facilities and offers procedures for estimating the resulting magnitude of the uncertainties in the measurement results. Basic concepts of measurement, estimate of the measured value of a quantity, "true" value, error and uncertainty are defined and discussed. Components of uncertainty are discussed and methods are given for evaluating and estimating their values. Their contributions to the standard uncertainty in the reported values of absorbed dose are considered and methods are given for calculating the combined standard uncertainty and an estimate of overall (expanded) uncertainty.

6.2 The components of uncertainty involved in a measurement shall be estimated or determined. The overall uncertainty in the measurement may be estimated from a combination of these components, and the procedure for combining these components shall be specifically stated or referenced in all results.

6.3 The relative standard uncertainties associated with measurement of absorbed dose with alanine dosimeters from any radiation source are shown in Table 4. The components are assumed to be uncorrelated and are combined in quadrature, i.e., by taking the square root of the sum of the squares. The combined relative standard uncertainty is multiplied by a coverage factor of two which corresponds approximately to a 95% confidence level.

Table 4
Uncertainties of Alanine Absorbed Dose Measurements

Source of Uncertainty	Type A (%)	Type B (%)
Interspecimen scatter	0.71	--
Reproducibility and repeatability	0.08	--
System drift	--	0.20
Pellet mass determination	--	0.10
Combined separately	0.71	0.22
Combined relative standard uncertainty	0.75	
Relative expanded uncertainty (combined x 2)	1.5	

6.4 The uncertainties associated with measurement of absorbed dose with radiochromic film dosimeters are shown in Table 5.

Table 5
Uncertainties of Radiochromic Film Absorbed Dose Measurements

Source of Uncertainty	Type A (%)	Type B (%)
Interspecimen scatter	1.00	--
Repeatability and reproducibility	0.10	--
Spectrophotometer zero drift	--	0.20
Thickness measurement	--	0.40
Combined separately	1.00	0.45
Combined relative standard uncertainty	1.10	
Relative expanded uncertainty (combined x 2)	2.2	

6.5 The relative uncertainties in absorbed dose values for irradiations of any type of dosimeters in the standard geometries in both Gammacells and the Pool Source is shown in Table 6.

Table 6
Uncertainties in Absorbed Dose (in water) Values
for Irradiations in the Gammacells or the Pool Source

Source of Uncertainty	Type A (%)	Type B (%)
Calorimeter measurement of Vertical Beam source	0.16	0.32
Scaling procedure	--	0.35
Source ratio measurement data	0.35	
Source decay, half life	--	0.01
Irradiation timing	0.17	--
Geometry correction factor	0.61	--
Irradiation temperature correction	--	0.02
Combined separately	0.74	0.47
Combined relative standard uncertainty	0.88	
Relative expanded uncertainty (combined x 2)	1.8	

To convert the dose values from dose in water to dose in silicon requires the use of ratios of mass energy absorption coefficients and contributes an additional Type B component of 0.30% to those in Table 6. Thus the combined separately Type B value increases to 0.55%, the total combined value increases to 0.93%, and the total combined x 2 increases to 1.9%.

6.6 The relative uncertainties in the use of alanine transfer standard dosimeters in measurements of absorbed dose is shown in Table 7.

Table 7
Uncertainties in Absorbed Dose (in water) Values for Alanine Transfer Dosimeters

Source of Uncertainty	Type A (%)	Type B (%)
Alanine single-hole cup dose rate	0.36	0.47
Alanine dose measurement (from Table 4)	0.71	0.22
Irradiation temperature correction	--	0.10
Elapsed time between irradiation and analysis	--	0.25
Dose value derived from calibration curve	--	0.50
Combined separately	0.80	0.77
Combined relative standard uncertainty	1.1	
Relative expanded uncertainty (combined x 2)	2.2	

The Type A relative uncertainty shown for the single-hole cup dose rate alanine response is smaller than that shown in Table 6 because the dosimeters are calibrated in that fixed geometry for GC-232 only.

6.7 The relative uncertainties associated with the use of radiochromic film transfer standard dosimeters in shown in Table 8.

Table 8
Uncertainties in Absorbed Dose (in water) Values for Radiochromic Film Transfer Dosimeters

Source of Uncertainty	Type A (%)	Type B (%)
Film block dose rate	0.40	0.47
Film dose measurement (from Table 5)	1.0	0.45
Energy spectra correction	--	0.50
Elapsed time between irradiation and analysis	--	0.50
Dose value derived from calibration curve	--	1.80
Combined separately	1.1	2.0
Combined relative standard uncertainty	2.3	
Relative expanded uncertainty (combined x 2)	4.6	

As was the case for the alanine transfer dosimeters, the Type A uncertainty for the film block dose rate is smaller than that shown in Table 6 for the same reason: the calibration was performed in a fixed geometry in the GC-232 source only.

6.8 The uncertainty values provided may change. It shall be the responsibility of the calibration laboratory to notify each affected client of any such changes, and the corrected values of all affected quantities previously reported to that client.

7. Control Limits

7.1 The control limits referred to in Section 5 on quality control are derived from the uncertainties associated with each type of dosimeter employed. For the alanine dosimeter system, the combined relative standard uncertainty from Table 4 is 0.61%. For a safety factor of three, the control limits would be 3 x 0.61 or ±1.83%. Similarly, for the radiochromic film dosimeter system, the combined relative standard uncertainty from Table 5 is 1.10% and the control limits would be 3 x 1.10 or ±3.30%.

7.2 Designate the target absorbed dose (discussed in Section 5), calculated from the irradiator dose rate and irradiation time, as D_T. Then the dose indicated by the alanine quality control dosimeters should be within the control limits: D_T ±1.83%. Similarly, the dose indicated by the radiochromic film quality control dosimeters should be within D_T ±3.30%. If the doses indicated by the quality control dosimeters are within the indicated limits than the quality control process is said to be in a state of control. If the indicated doses are outside the control limits, then the quality control process is "out of control" and the process must be investigated and appropriate remedial action taken.

8. Keywords - Absorbed dose; calibration laboratory; dosimeter; dosimetry system; electron beam; gamma ray; ionizing radiation; radiation processing; reference standard dosimeter.

9. References

1. Inn, K.G.W., Coursey, B.M., Eisenhower, E.H., Walker, M.D., Humphreys, J.C., Heaton, H.T., Duvall, K.C., "The role of the Office of Radiation Measurement in quality assurance," *The Science of the Total Environment*, **130/131**, Elsevier Science Publishers B.V., Amsterdam, 1993, pp. 497-507.

2. McLaughlin, W.L., "Reference dosimetry and measurement quality assurance," Rad. Phys. Chem. **40**, 1989, pp. 945-951.

3. Nagy,V.Yu., Desrosiers,M.F., "Complex Time Dependence of the EPR Signal of Irradiated L-α-Alanine," Appl. Radiat. Isot. **47(8)**, 1996, pp. 789-793.

4. Taylor, B.N. and Kuyatt, C.E., "Guidelines for Evaluating and Expressing the Uncertainty of NIST Measurement Results," NIST Technical Note 1297, Natl. Inst. Stand.Tech., Gaithersburg, MD, 1994.

5. "Guide to the Expression of Uncertainty in Measurement," International Organization for Standardization, 1993, ISBN 92-67-10188-9[3].

[3]Available from ISO Central Secretariat, Case Postale 56, CH-1211 Geneva 20, Switzerland.

Appendix 1

WLPG.ADL program:

```
{This program can be actived from either the User_result line or the     }
{Calculator page. It will measure the nominated number of samples at 510  }
{and 605 nm. These wavelengths can be easily changed. The user will then  }
{ Author: Jim Puhl                                                        }
{ Revised 4/10/97                                                         }

dim A510[1000] A605[1000]

define readit
    print("please wait, measuring sample",n,"...")
    A510[N] = read(510)
    A605[N] = read(605)
    TABLEDATA(n,A605[N],A510[N])
    n=n+1
enddef

define finchek
   print ("Are you ready to end session and exit?")
   q$=input
   if (q$="y") or (q$="Y") then finis=1
enddef

define recount
    print("What is the new film number? ")
    n=input
enddef

define wlpg

STARTPRINT
SET(AUTOP,1)

print("Enter user name ")
name$=input
lprint("Operator: ",name$)
print("Enter your comment ")
comment$=input
lprint("Comment: ",comment$)
lprint("Date: ",recall_str(recall(5,35),0))
```

```
print("What is the starting film number? ")
bnum=input
n=bnum
page=4
goto_page

TABLEFMT("DDZ","Z.DDDD","Z.DDDD")
TABLEHDR("   FILM ID   "," 605 nm   "," 510 nm   ")
 finis=0
 do while finis=0
 statusstr("1=read 2=adjust counter 3=exit")
 print ("ready for sample",n,", please choose 1-3 from the choices at the top:")
 q=input
  case q
    1:readit
    2:recount
    3:finchek
  end
 end
SET(AUTOP,0)
prog$="c:\command.com /c edit c:\varian\cary13e\current.rep"
spawn_prog
enddef
```

Appendix 2

thread.bas (DOS Basic) program:

```
10 COLOR 15,1:CLS:DIM DA(1000)
20 PRINT" THREAD.BAS - DOWNLOAD THICKNESS DATA FROM MULTIPLEXER
5/13/96 jmp"
30 XON$=CHR$(17)  'CTRL-Q
40 XOFF$=CHR$(19)  'CTRL-S
50 INPUT "ENTER STARTING FILM NUMBER:  ",SNUM:LOCATE 3,1:PRINT " ";
60 F$="THREAD.T":OPEN "O",2,F$:PRINT "DATA WILL BE WRITTEN TEMPORARILY
TO ";F$
70 LOCATE 4,1:J=0:L=4:C=1:INPUT"Press ENTER to start the transmission.",A$
80 LOCATE 23,1:PRINT"Press <SPACEWAR> to stop the transmission "
90 OPEN "COM1:1200,N,8,1" AS #1:
100 SNUM$=STR$(SNUM):SNUM$=SPACE$(4-LEN(SNUM$))+SNUM$
110 LOCATE L,C:PRINT"WAITING FOR ZERO READING...          "
120 CO$="1":PRINT#1,CO$:INPUT#1,DA$:I=I+1
130 DA$=MID$(DA$,4,9):DA=VAL(DA$):CLOSE 1
140 IF DA> .001 THEN GOTO 90 ELSE SOUND 2000,1:SOUND 1000,1
150 DA(1)=1:DA(2)=2:I=2
160 WHILE DA(I)<>DA(I-1):OPEN "COM1:1200,N,8,1" AS #1
170 LOCATE L,C:PRINT SPC(27):LOCATE L,C:PRINT"READING ";SNUM$;"..."
180 T1=TIMER :T2=T1+1:WHILE T2>=TIMER:PRINT "";:WEND:' wait one second
190 A$=INKEY$:IF A$<>"" THEN CLOSE 1:GOTO 300
200 CO$="1":PRINT#1,CO$:INPUT#1,DA$:I=I+1
210 DA$=MID$(DA$,4,9):DA(I)=VAL(DA$):TH$=RIGHT$(DA$,6)
220 LOCATE L,C:PRINT SNUM$;"     ";TH$:CLOSE 1:WEND
230 IF DA(I)< .01 THEN GOTO 150
240 IF L=19 THEN C=25 :L=4
250 IF L=37 THEN C=50 : L=4
260 O$=SNUM$+" = "+TH$+" mm    "
270 SOUND 800,1:LOCATE L,C:PRINT O$:PRINT #2,SNUM$,TH$
280 LPRINT O$:L=L+1:SNUM=SNUM+1:GOTO 90
290 '
300 'SPACEWAR ROUTINE
310 LOCATE 23,1:PRINT SPACE$(75):LOCATE 22,1:PRINT "1)";
320 INPUT " save file and quit  2) reset counter  3) continue  4) quit  ";Q
330 LOCATE 22,1:PRINT SPACE$(75)
340 IF Q=3 THEN LOCATE 22,1:PRINT SPACE$(75):GOTO 80
350 IF Q=2 THEN LOCATE 22,1:INPUT "enter new counter number:";SNUM:GOTO 80
360 IF Q=1 THEN CLOSE:GOTO 380
```

```
370 IF Q<> 4 THEN GOTO 300 ELSE STOP
380 ON ERROR GOTO 410:INPUT "Filename";N$ : NAME N$ AS N$
390 '
400 '     ERROR TRAP
410 IF ERR=58 THEN EX$="y":RESUME 430
420 IF ERR=53 THEN EX$="N":RESUME 430
430 ON ERROR GOTO 0:IF EX$ <>"y" THEN T$="O":GOTO 460
440 INPUT "FILE ALREADY EXISTS - A to append ,O to overwrite or R to rename";T$
450 ON ERROR GOTO 0
460 IF T$="R" OR T$="r" THEN GOTO 380
470 IF T$="O" OR T$="o" THEN SHELL "DEL "+N$:SHELL "REN "+F$+" "+N$
480 IF T$="A" OR T$="a" THEN SHELL "COPY "+N$+" + "+F$
490 INPUT "WOULD YOU LIKE TO CHECK IT? (Y OR N)";Z$:
500 IF Z$="y" OR Z$="Y" THEN GOTO 510 ELSE GOTO 520
510 SHELL "edit "+N$:
520 STOP
```

Appendix 3

a160.bas (DOS Basic) program:

```
10 GOSUB 560:COLOR 15,1:CLS:ON ERROR GOTO 210
20 'COLOR 15,1:CLS:GOSUB 510:
30 PRINT "file A160READ.BAS    last update 3/3/97"
40 INPUT "ENTER STARTING PELLET NUMBER: ";SPN
50 PRINT:PRINT " DATA WILL BE STORED TO FILE: ";F$
60 PRINT"Press ENTER to start the transmission or Q to quit."
70 A$=INKEY$:IF A$="" THEN GOTO 70
80 IF A$="Q" OR A$="q" THEN STOP
90 OPEN "COM1:4800,N,8,2,RS,CD,DS,CS" AS #1
100 PN=SPN:WAYT=10:OPEN "O",2,F$:CLOSE 2
110 PRINT"Press any key to stop the transmission "
120 LOCATE 24,1:GOSUB 290:T0=TIMER
130 I$=INKEY$:IF I$<>"" THEN CLOSE 1:GOTO 520
140 IF TIMER-T0 > WAYT THEN GOSUB 230
150 LINE INPUT#1,A$:
160 NUM=VAL(MID$(A$,3,LEN(A$)))
170 IF NUM<>ONUM THEN LOCATE 24,1:PRINT
PN,NUM,0;:ONUM=NUM:T0=TIMER:GOTO 200
180 LOCATE 24,1:PRINT PN,NUM,CINT(TIMER-T0);
190 OPEN "a",3,"a160all.dat":PRINT#3,PN,NUM,CINT(TIMER-T0),TIME$:CLOSE 3
200 GOTO 130
210 PRINT ERR:RESUME NEXT
220 GOTO 130
230 PN$=STR$(PN):PL=LEN(PN$)-1:NUM$=STR$(NUM):NUML=LEN(NUM$)-1
240 OL$=RIGHT$(PN$,PL)+CHR$(44)+RIGHT$(NUM$,NUML)
250 OPEN "A",2,F$:PRINT #2,OL$:CLOSE 2
260 OPEN "o",2,"A161.OUT":PRINT #2,OL$:CLOSE 2
270 BEEP:'FOR I=100 TO 3200 STEP 100:SOUND I,.5:NEXT I
280 PN=PN+1:PRINT:PRINT "PRESS ANY KEY TO STOP":T0=TIMER
290 PRINT "WAITING FOR ZERO"
300 LINE INPUT#1,A$:
310 I$=INKEY$:IF I$<>"" THEN CLOSE 1:GOTO 510
320 NUM=VAL(MID$(A$,3,LEN(A$)))
330 T0=TIMER
340 I$=INKEY$:IF I$<>"" THEN GOTO 510
350 IF TIMER-T0 > 2 THEN GOTO  420
360 LINE INPUT#1,A$:
370 NUM=VAL(MID$(A$,3,LEN(A$)))
```

```
380 IF NUM<>0 THEN LOCATE 24,1:PRINT,NUM,0;:T0=TIMER:GOTO 340
390 LOCATE 24,1:PRINT ,NUM,CINT(TIMER-T0);
400 OPEN "a",3,"a160all.dat":PRINT#3,"zero",NUM,CINT(TIMER-T0),TIME$:CLOSE 3
410 GOTO 340
420 IF NUM <> 0 THEN GOTO 300
430 PRINT:'FOR I=2500 TO 100 STEP -100:SOUND I,.5:NEXT I
440 BEEP:BT=TIMER:WHILE TIMER<BT+.5:PRINT"";:WEND:BEEP
450 PRINT "WAITING FOR PELLET# ";PN
460 LINE INPUT#1,A$:
470 I$=INKEY$:IF I$<>"" THEN GOTO 510
480 NUM=VAL(MID$(A$,3,LEN(A$)))
490 IF NUM <.03 THEN GOTO 460
500 RETURN
510 PRINT:PRINT "PRESS Q TO QUIT OR B TO STAY IN BASIC"
520 A$=INKEY$:IF A$="" THEN GOTO 520
530 IF A$="Q" OR A$="q" THEN SYSTEM
540 IF A$<>"B" AND A$<>"b" THEN GOTO 520
550 STOP
560 '
570 '  filename subroutine
580
DTE$=DATE$:M$=LEFT$(DTE$,2):D$=MID$(DTE$,4,2):Y$=RIGHT$(DTE$,2):ANUM=0
590 DTE$=Y$+M$+D$
600 F$=DTE$+CHR$(65+ANUM)+".DAT"
610 ON ERROR GOTO 640: NAME F$ AS F$
620 '
630 '     ERROR TRAP
640 IF ERR=58 THEN EX$="y":RESUME 660
650 IF ERR=53 THEN EX$="N":RESUME 660
660 ON ERROR GOTO 0
670 IF EX$ <>"y" THEN GOTO 710
680 ANUM=ANUM+1:IF ANUM <=25 THEN GOTO 600
690 IF LEN(DTE$)=6 THEN DTE$=DTE$+"A" :ANUM=0:GOTO 600
700 DTE$=LEFT$(DTE$,6)+CHR$(ASC(RIGHT$(DTE$,1))+1):ANUM=0:GOTO 600
710 RETURN
720 RETURN
```

Appendix 4

Fee schedule supplied to the customer:

February 21, 1997
From: James Puhl
NIST High-Dose Calibration Service
Building 245, Room C229
Gaithersburg, MD 20899

Dear Calibration Customer: New fees for high-dose calibration services are in effect.

Schedule No.	Calibration of Dosimeters Irradiated with ^{60}Co Gamma Rays	Cost
49010C		$589

Calibration irradiations are available for customer-supplied dosimeters (such as solid radiochromic or liquid chemical types) or test samples that are sent to NIST, where they are packaged appropriately to provide electron equilibrium conditions. They are irradiated in the NIST standard cobalt-60 calibration facility to specfic, agreed-upon absorbed dose values in the nominal "high-dose" range of 10-10^6 Gy. The dosimeters are then sent back to the customer for analysis and evaluation. Dosimeters should not exceed dimensions of 1 cm x 2 cm x 5 cm. A typical uncertainty value for irradiations of radiochromic film with the standard Gammacell 220-232 is ± 1.8 at an approximate level of confidence of 95%.

Schedule No.	Set of Three Transfer Reference Standard Dosimeters Alanine Pellets or Radiochromic Film	Cost
49020C		$1916
49030C	Each Additional Dosimeter	$391

NIST will provide transfer standards in the form of calibrated alanine or radiochromic film dosimeters packaged in polystyrene. The sealed, packaged dosimeters are sent to the customer for irradiation to nominal agreed-upon absorbed dose levels in a prescribed geometrical arrangement. The unopened, packaged dosimeters are then returned to NIST to be read, evaluated and the results reported, thus providing calibration of the customer's irradiator. The absorbed dose range that is suitable for use with the transfer dosimeters is 1 to 50 kGy in water. The absorbed dose rate should be greater than 30 Gy/min. A typical uncertainty value for alanine transfer standard calibrations is ± 2.2% at an approximate level of confidence of 95%. A typical uncertainty value for radiochromic film transfer standard calibrations is ± 4.6% at an approximate level of confidence of 95%.

Schedule No.	Additional Services	Cost
49040S	Spectrophotometric reading of dosimeters, optical density at one to five wavelengths (each dosimeter).	$141
49041S	Spectrophotometric reading of dosimeters, ultraviolet and visible spectrum scan (each dosimeter).	$367
49050S	Special measurement services.	At cost

Please send requests and/or dosimeters to me at the above address. Be sure to specify the name and phone number of a technical contact. Domestic orders require a purchase order and foreign orders require pre-payment. If you have any questions, please contact me.
PHONE: 301-975-5581 FAX: 301-869-7682 E-MAIL: jpuhl@nist.gov

Appendix 5

Instructions to customer for handling of radiochromic film transfer dosimeters:

Guidelines for the use of NIST Transfer Dosimeters

1. Please do not open the packages at any time; they provide a controlled environment for the dosimeters.

2. Please provide average temperature for each dosimeter during the irradiation period.

3. Other irradiation data to include with the returning dosimeters

- Irradiation geometry (i.e., orientation, position, surrounding materials)
- Type of source (i.e., if gamma-ray source, identify the specific isotope)
- How you wish for us to identify your source in the Report of Calibration
- Date and time of irradiation
- Length of the irradiation period
- Nominal dose and dose rate
- Any other pertinent information

4. The nominal absorbed doses received should be within the range of 1 kGy to 30 kGy for alanine and 5 kGy to 30 kGy for film.

5. Please irradiate and return the dosimeters to us within 60 days to minimize the uncertainty in the final results. Please use the following address for return shipment:

NIST
ATTN: JAMES PUHL
BLDG. 245, ROOM C229
GAITHERSBURG, MD 20899

Appendix 6

Examples of calibration reports:

United States Department of Commerce
National Institute of Standards and Technology
Gaithersburg, MD 20899 USA

REPORT OF CALIBRATION

OF: FWT-60 Batch 6F5 Radiochromic Film Dosimeters

FOR: Ed's Sterilizers
10 Gamma Avenue
Mega Rad, TX 99817

ATTN: Cobalt Jones
REF: PO# 232

DESCRIPTION: Batch 6F5 film dosimeters were supplied by Ed's Sterilizers in pre-sealed foil pouches. The dosimeters were irradiated under controlled conditions using gamma radiation from a calibrated ^{60}Co irradiator, the NIST Gammacell 220-232. During irradiation the pouches were held between two polystyrene blocks with a wall thickness of 5 mm. The dates of irradiation, values of dose rate, absorbed dose, and mean irradiation temperature were as follows:

For December 31, 1996, film block, in Gammacell 220-232, $\dot{D}_{H_2O}$ = 10.68 kGy/h

Dosimeter Identification	Date of Irradiation	$\dot{D}_{H_2O}$ (kGy/h)	Irradiation Temp. °C	Absorbed Dose kGy(H_2O)
Pouch 1	Nov 21, 1997	9.210	24.0	10.00
Pouch 2	Nov 20, 1997	9.211	24.0	20.00
Pouch 3	Nov 20, 1997	9.211	24.0	30.00
Pouch 4	Nov 21, 1997	9.210	24.0	40.00
Pouch 5	Nov 21, 1997	9.210	24.0	50.00

REFERENCE TEST 846/256018-97 Sep. 25, 1997
NIST DB 932/018 HD9799

The last page of this Report describes uncertainties and related factors in high-dose calibrations, such as the one covered by this Report of Calibration. If there are further questions, they should be directed to the first individual named below.

Measurements were made by

J. M. Puhl, Calibrations Technician
(301)975-5581

Approved by

Stephen M. Seltzer, Leader
Radiation Interactions and Dosimetry Group

For the Director
National Institute of Standards and Technology
by

Bert M. Coursey, Chief
Ionizing Radiation Division
Physics Laboratory

UNCERTAINTIES AND RELATED FACTORS IN HIGH-DOSE CALIBRATIONS

High-Dose Calibrations in Standard Geometries using the NIST Cobalt-60 Irradiators

(Relative expanded uncertainty: ± 1.8% at a 95% confidence level)

The high-dose calibrations at NIST involve the administration of ^{60}Co gamma radiation under environmentally controlled conditions. The dose values are based on standard water calorimeter measurements and EPR/Alanine dosimetry, which are corrected by certain modifying factors (such as the estimated photon spectrum, radiation energy absorption and attenuation factors, and source decay factors).

The uncertainty cited above is pertinent to absorbed dose in water in calibrated geometries. A detailed list of the various sources of uncertainty and estimates of the magnitude of those uncertainties that make up the overall uncertainty given above may be obtained by requesting such information from NIST. The uncertainties are divided into two types: A and B. Type A uncertainties are those evaluated by statistical methods, often associated with random effects. Type B uncertainties are those evaluated by other means, often associated with systematic effects.

Type A Uncertainties

The combined relative standard uncertainty evaluated by statistical methods is ± 0.7% at an approximate level of confidence of 68%.

Type B Uncertainties

The combined relative standard uncertainty based on scientific judgement is estimated to be ± 0.5% at an approximate level of confidence of 68%.

Expanded Uncertainty

The type A and type B uncertainties have been combined in quadrature (the square root of the sum of the squares) and multiplied by a coverage factor of 2 to yield a relative expanded uncertainty of ± 1.8% at an approximate level of confidence of 95%.

The last page of this Report describes uncertainties and related factors in high-dose calibrations, such as the one covered by this Report of Calibration. If there are further questions, they should be directed to the first individual named below.

Measurements were made by

J. M. Puhl, Calibrations Technician
(301)975-5581

Approved by

Stephen M. Seltzer, Leader
Radiation Interactions and Dosimetry Group

For the Director
National Institute of Standards and Technology
by

Bert M. Coursey, Chief
Ionizing Radiation Division
Physics Laboratory

United States Department of Commerce
National Institute of Standards and Technology
Gaithersburg, MD 20899 USA

REPORT OF CALIBRATION

OF: Ed's Sterilizers
^{60}Co Calibrator, s/n 10
by use of NIST
Transfer Dosimeters

FOR: Ed's Sterilizers
10 Gamma Avenue
Mega Rad, TX 99817

ATTN: Cobalt Jones
REF: PO# 232

Description: Transfer dosimetry packets, consisting of five calibrated FWT-60-00 radiochromic dosimeters (NIST Batch #7f6a), held between 5.0 mm thick blocks of polystyrene and sealed inside a thin polymer-aluminum laminate pouch (R.H. = 45% at time of sealing), were sent to Ed's Sterilizers for irradiation in their ^{60}Co calibrator. Upon their return to NIST, the dosimeters were analyzed on 11/23/97, using a Cary 3 spectrophotometer(S/N 1101115, 4.0 nm S.B.W.). Absorbed dose interpretations were made from a calibration of this batch of radiochromic dosimeters performed in March 1997. The results are summarized in the following table.

Dosimeter ID	NIST Interpolated Dose, kGy(H_2O)
875-879	10.99
880-884	11.01
885-889	11.09

UNCERTAINTIES AND RELATED FACTORS IN HIGH-DOSE CALIBRATIONS

Absorbed Dose Evaluations Based on Use of Mailed Film Transfer Standard Dosimeters

(Relative expanded uncertainty: ± 4.6% at a 95% confidence level)

The use of NIST transfer standard dosimeters to calibrate the dose rate of the customer's in-house radiation source is subject to the limitations and precautions described in the letter accompanying the dosimeters. The customer must follow the prescribed procedures carefully in order to ensure that the results obtained from the transfer dosimeters are valid.

In the case of absorbed dose in water evaluation based on NIST radiochromic film dosimeters (nominal dose range 5×10^3 to 5×10^4 Gy) that are traceable to ^{60}Co gamma-ray calibrations at NIST, the uncertainty value cited above (± 4.6%) may be assumed as long as suitable care is exercised.

A detailed list of the various sources of uncertainty and estimates of the magnitude of those uncertainties that make up the overall uncertainty given above may be obtained by requesting such information from NIST. The uncertainties are divided into two types: A and B. Type A uncertainties are those evaluated by statistical methods, often associated with random effects. Type B uncertainties are those evaluated by other means, often associated with systematic effects.

Type A Uncertainties

The combined relative standard uncertainty evaluated by statistical methods is ± 1.1% at an approximate level of confidence of 68%.

Type B Uncertainties

The combined relative standard uncertainty based on scientific judgement is estimated to be ± 2.0% at an approximate level of confidence of 68%.

Expanded Uncertainty

The type A and type B uncertainties have been combined in quadrature (the square root of the sum of the squares) and multiplied by a coverage factor of 2 to yield a relative expanded uncertainty of ± 4.6% at an approximate level of confidence of 95%.

UNCERTAINTIES AND RELATED FACTORS IN HIGH-DOSE CALIBRATIONS

Absorbed Dose Evaluations Based on Use of Mailed Alanine Transfer Standard Dosimeters

(Relative expanded uncertainty: ± 2.2% at a 95% confidence level)

The use of NIST transfer standard dosimeters to calibrate the dose rate of the customer's in-house radiation source is subject to the limitations and precautions described in the letter accompanying the dosimeters. The customer must follow the prescribed procedures carefully in order to ensure that the results obtained from the transfer dosimeters are valid.

In the case of absorbed dose in water evaluation based on NIST alanine pellet dosimeters (nominal dose range 1×10^3 to 5×10^4 Gy) that are traceable to ^{60}Co gamma-ray calibrations at NIST, the uncertainty value cited above (± 1.8%) may be assumed as long as suitable care is exercised.

A detailed list of the various sources of uncertainty and estimates of the magnitude of those uncertainties that make up the overall uncertainty given above may be obtained by requesting such information from NIST. The uncertainties are divided into two types: A and B. Type A uncertainties are those evaluated by statistical methods, often associated with random effects. Type B uncertainties are those evaluated by other means, often associated with systematic effects.

Type A Uncertainties

The combined relative standard uncertainty evaluated by statistical methods is ± 0.7% at an approximate level of confidence of 68%.

Type B Uncertainties

The combined relative standard uncertainty based on scientific judgement is estimated to be ± 0.6% at an approximate level of confidence of 68%.

Expanded Uncertainty

The type A and type B uncertainties have been combined in quadrature (the square root of the sum of the squares) and multiplied by a coverage factor of 2 to yield a relative expanded uncertainty of ± 1.8% at an approximate level of confidence of 95%.

THE SP 250 SERIES ON NIST MEASUREMENT SERVICES*

SP 250–1 Spectral Radiance Calibrations
PB87179883

SP 250–2 Far Ultraviolet Detector Standards
PB87227609

SP 250–3 Radiometric Standards in the Vacuum Ultraviolet
PB87227625

SP 250–4 Fricke Dosimetry in High-Energy Electron Beams
PB88110374

SP 250–5 Alpha-Particle Calibrations
PB88168620

SP 250–6 Regular Spectral Transmittance
PB88108550

SP 250–7 Radiance Temperature Calibrations
PB88123674

SP 250–8 Spectral Reflectance
PB88109905

SP 250–9 Calibration of Beta-Particle-Emitting Ophthalmic Applicators
PB88108535

SP 250–10 Radioactivity Calibrations with the "4π" Gamma Ionization Chamber and Other Radioactivity Calibration Capabilities
PB88123708

SP 250–11 Dosimetry for High Dose Applications
PB88201587

SP 250–12 Neutron Personnel Dosimetry
PB87227617

SP 250–13 Activation Foil Irradiation with Californium Fission Sources
PB88217443

SP 250–14 Activation Foil Irradiation by Reactor Cavity Fission Sources
PB88217435

SP 250–15 Photometric Calibrations
PB88153747

SP 250–16 Calibration of X-Ray and Gamma-Ray Measuring Instruments
PB88211826

SP 250–17 The NBS Photodetector Spectral Response Calibration Transfer Program
PB88201595

SP 250–18 Neutron Source Strength Calibrations
PB88211818

SP 250–19 Calibration of Gamma-Ray-Emitting Brachytherapy Sources
PB89193858

SP 250–20 Spectral Irradiance Calibrations
PB88123781

SP 250–21 Calibration of Beta-Particle Radiation Instrumentation
PB88201579

SP 250–22 Platinum Resistance Thermometer Calibrations
PB88138367

SP 250–23 Liquid-in-Glass Thermometer Calibration Service
PB89128888

SP 250–24 Standard Cell Calibrations
PB88123690

SP 250–25 Calibration Service for Inductive Voltage Dividers

SP 250–26 NBS Phase Angle Calibration Services
PB88225636

SP 250–27 AC–DC Difference Calibrations
PB892222616

SP 250–28 Solid-State DC Voltage Standard Calibrations
PB88168703

SP 250–29 Traceable Frequency Calibrations
PB88168364

SP 250–30 GOES Satellite Time Code Dissemination: Description and Operation
PB88168760

SP 250–31 Mass Calibrations
PB89153894

SP 250–32 A Calibration Service for 30 MHz Attenuation and Phase Shift
PB88238324

SP 250–33 A Calibration Service for Voltage Transformers and High-Voltage Capacitors
PB882252903

SP 250–34 High Vacuum Standard and Its Use
PB89193841

SP 250–35 The Calibration of Thermocouples and Thermocouple Materials
PB89209340

SP 250–36 A Calibration Service for Current Transformers

SP 250–38 NIST Leak Calibration Service

SP 250–40 Absorbed-Dose Calibration of Ionization Chambers in a ^{60}Co Gamma-Ray Beam
SN003-003-03034-1 $2.00

* Entries Entries containing a stock number (SN003–003–) and price can be purchased from the Superintendent of Documents, U.S. Government Printing Office, Washington, DC 20402. GPO will accept checks, money orders, VISA, and MasterCard. For more infomation, or to place an order, call (202) 783–3238. Be sure to cite the stock number on all orders.

Entries containing PB numbers can be purchased from the National Technical Information Service, Springfield, VA 22161. NTIS will accept American Express in addition to the payment methods listed for GPO. For more information call (703) 487-4650; to place an order call (800) 336-4700. Be sure to cite the PB number on all orders.

Entries without stock or PB numbers are in preparation.

U.S. Department of Commerce
National Institute of Standards
and Technology
Gaithersburg, MD 20899–0001

Official Business
Penalty for Private Use $300