NIST Measurement Services:

A Calibration Service for Current Transformers

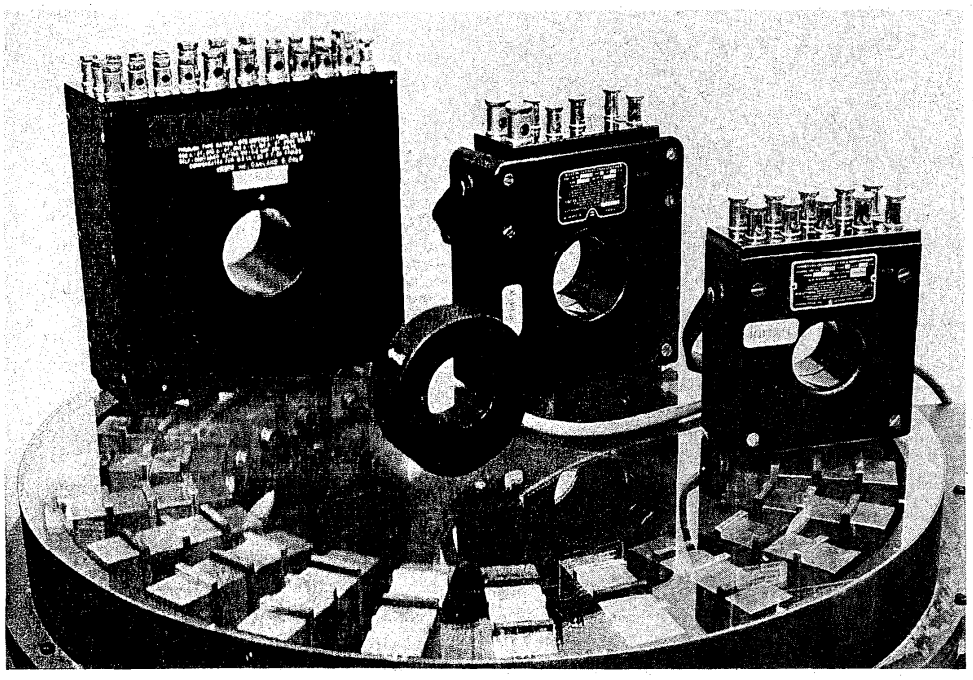

NIST
Special
Publication
250–36

John D. Ramboz and Oskars Petersons

U.S. Department of Commerce
National Institute of Standards and Technology

NIST MEASUREMENT SERVICES:
A Calibration Service for Current Transformers

John D. Ramboz and Oskars Petersons

Electricity Division
Electronics and Electrical Engineering Laboratory
National Institute of Standards and Technology
Gaithersburg, MD 20899

June 1991

U.S. DEPARTMENT OF COMMERCE, Robert A. Mosbacher, Secretary
NATIONAL INSTITUTE OF STANDARDS AND TECHNOLOGY
John W. Lyons, Director

National Institute of Standards and Technology Special Publication 250-36
Natl. Inst. Stand. Technol. Spec. Publ. 250-36, 60 pages (June 1991)
CODEN: NSPUE2

U.S. GOVERNMENT PRINTING OFFICE
WASHINGTON: 1991

For sale by the Superintendent of Documents, U.S. Government Printing Office, Washington, DC 20402–9325

INTRODUCING THE ELECTRONICS AND ELECTRICAL ENGINEERING LABORATORY

The Electronics and Electrical Engineering Laboratory (EEEL) is the component of the National Institute of Standards and Technology charged with providing Institute activities and services supporting electrotechnology. In response to identified and anticipated needs, Laboratory programs provide national reference standards, measurement methods, supporting theory and data, and traceability to national standards. Beneficiaries are U.S. industry, other Government organizations, the academic community, and society at large. In fiscal year 1990, the Laboratory calibrated nearly a thousand transfer standards for some 200 customers.

The Laboratory is organized into four technical divisions, with the Electricity and Semiconductor Electronics Divisions at Gaithersburg, Maryland and the Electromagnetic Fields and Electromagnetic Technology Divisions at Boulder, Colorado. The Laboratory provides **measurement research and services** for:

- Conducted electrical signals and energy in the Electricity Division:
  - basic reference standards for electrical measurements
  - dielectrics for advanced power systems
  - conducted electromagnetic interference
  - waveform synthesis
  - signal acquisition and processing
  - automatic test equipment
  - calibration/testing strategies
- Radiofrequency signals and interference in the Electromagnetic Fields Division:
  - radiofrequency to millimeter-wave electromagnetic fields and signals
  - general microwave and millimeter-wave instruments, components
  - microwave and millimeter-wave noise
  - microwave and millimeter-wave antenna systems
  - radiated electromagnetic interference; electromagnetic compatibility
  - monolithic microwave/millimeter-wave integrated circuits
  - materials properties measurements at high frequencies
- Lightwaves, cryogenics, and magnetics in the Electromagnetic Technology Division:
  - optical fibers; integrated electro-optics
  - superconducting materials
  - superconducting electronics
  - magnetic materials
- Semiconductor Electronics, in the Semiconductor Electronics Division:
  - semiconductor materials, such as silicon and gallium arsenide
  - semiconductor materials modification
  - semiconductor devices
  - integrated-circuit test structures for rapid process assessment

For information, contact the Laboratory at 1-301-975-2220 or write to: Electronics and Electrical Engineering Laboratory, Metrology Building Room B-358, National Institute of Standards and Technology, Gaithersburg, MD 20899.

— PREFACE —

Calibrations and related measurement services of the National Institute of Standards and Technology (NIST) provide the means for industry, government agencies, academia, and others to relate the measurements they make to national standards and, by extension, to the measurement systems of other countries throughout the world. It is of crucial importance for the improvement of U.S. productivity, efficiency, and quality—in short our competitive stance—that measurements of appropriate accuracy can be made at all stages of product development, production, and marketing and that it is possible to refer the results of these measurements to each other in a meaningful way. NIST services provide essential support for satisfying these needs, as well as measurement needs arising from societal concerns such as health, safety, natural resources, and defense. The requirements of the NIST clientele range from the highest levels of accuracy realizable from advanced science and technology to the practical levels of accuracy needed to support routine production. A reference-level measurement may be the result of days of painstaking individual effort or may be provided by a semi-automatic measuring system in minutes. The variation in customer needs and hence in the NIST services responsive to those needs is great.

The more than 300 different calibration services, measurement assurance services, and special tests that are offered by NIST are described in NIST Special Publication 250, *NIST Calibration Services Users Guide*. The *Guide* provides essential technical details of NIST calibration and related measurement services, such as levels of accuracy provided by NIST and the requirements to be met by customers' transfer standards. It also provides information needed for placing orders for these services and identifies technical and administrative contacts for each service.

Technical descriptions in the *Users Guide* are intended to be restricted to the material needed by a potential customer to decide if a given service will meet that customer's needs. Frequently, a customer may be interested in more detailed and extensive information, such as the way in which the errors associated with a measurement are assessed. Beginning in 1987, NIST established a Special Publication 250 series which supplements the *Guide*. Each publication in this series provides a detailed technical description of a specific NIST calibration service, or closely related set of services, and includes:

- specifications for the service
- design philosophy and theory
- description of the NIST measurement system used to provide the service
- NIST operational procedures
- measurement uncertainty assessment, including error budget, and identification of systematic and random errors
- NIST internal quality control procedures

Special Publication 250–36, **A Calibration Service for Current Transformers**, describes services offered under NIST Test Numbers 54520C through 54522C (current transformers). These services are provided by the Applied Electrical Measurements Group in the Electricity Division of the Electronics and Electrical Engineering Laboratory as part of a series of services offered by the Division in support of the transmission and distribution of electric power.

Table of Contents

1 INTRODUCTION 1
- 1.1 General Requirements . . . 1
- 1.2 Principles of Transformers and Nature of Their Errors . . . 3
- 1.3 Terms Related to Transformer Calibration . . . 5
- 1.4 Other Precision Transformer-Like Devices . . . 7
  - 1.4.1 Current Comparator . . . 8
  - 1.4.2 Two-Stage Transformer . . . 9
  - 1.4.3 Amplifier-Aided Transformer . . . 9
  - 1.4.4 Compensated Current Comparator . . . 9

2 CALIBRATION SYSTEM AT NIST 12
- 2.1 Calibration Circuits . . . 12
- 2.2 Details of Compensated Current Comparators and Calibration Hardware . . . 14
  - 2.2.1 Low-Range Current Comparator . . . 17
  - 2.2.2 Mid-Range Current Comparator . . . 17
  - 2.2.3 High-Range Current Comparator . . . 17
  - 2.2.4 Sensitivity Considerations . . . 18
  - 2.2.5 Accuracy Evaluation of Current Comparators . . . 19
- 2.3 Test Set . . . 20
- 2.4 Burdens . . . 21
- 2.5 Sources of Excitation . . . 22

3 CURRENT TRANSFORMER CALIBRATION PROCEDURES 22
- 3.1 Summary of Procedures . . . 22
- 3.2 Initial Preparation . . . 23
- 3.3 Demagnetization . . . 23
- 3.4 Burden Selection . . . 25
- 3.5 Current Ratio and Phase-Angle Data Collection . . . 28
- 3.6 Summarization of the Measurement Results . . . 29
- 3.7 Historical Data and Expected Performance . . . 34
- 3.8 The Report of Calibration . . . 34

4 MEASUREMENT UNCERTAINTY ANALYSIS 38
- 4.1 General Considerations . . . 38
- 4.2 Accuracy Evaluation of NIST Standards and Equipment . . . 38
  - 4.2.1 Current Comparators . . . 38
  - 4.2.2 Test Set . . . 41
- 4.3 Errors Originating in Transformers Being Tested . . . 41

4.4 Overall Measurement Uncertainties 44
4.5 Special High-Accuracy Transformers 45
4.6 International Comparisons 46

5 ACKNOWLEDGMENTS **46**

6 APPENDIX **47**

7 REFERENCES **51**

List of Figures

1. Two-Winding Transformer 3
2. Current Transformer Connected to Source and Burden 4
3. Phasor Diagrams Illustrating Terms Used With Instrument Transformer Ratios 7
4. Current Comparator Used to Calibrate a Current Transformer 8
5. Two-Stage Current Transformer 10
6. Amplifier-Aided Transformer 11
7. Compensated Current Comparator 11
8. Current Transformer Calibration With a Compensated Current Comparator, Secondary Feed 12
9. Current Transformer Calibration With a Compensated Current Comparator, Primary Feed 15
10. Calibration of a Current Transformer Having a Primary-to-Secondary Current Ratio Smaller Than One 16
11. Test Set Used to Sense Secondary Current in the Current Comparator and to Generate a Correction Current 20
12. Demagnetization Circuit 24
13. Current Transformer Calibration Typical Data Sheet 30
14. Current Transformer Calibration Spreadsheet for Calculation of Final Results 32
15. Ratio and Phase-Angle Uncertainty as a Function of Secondary Current 33
16. Historical Data of Transformer Calibration 34
17. Typical Report of Calibration 36

List of Tables

1. Turns Arrangement in the Low-Range Compensated Current Comparator 17
2. Turns Arrangement in the Mid-Range Compensated Current Comparator 18
3. Turns Arrangement in the High-Range Compensated Current Comparator 19
4. Standard ANSI/IEEE C57.13–1978 Burdens 26
5. Systematic Uncertainties in NIST Equipment 39
6. Estimated Possible Instabilities in a Typical Transformer Under Test 42
7. Calibration History of a Typical Laboratory Grade Current Transformer, Marked Ratio 10 A:5 A 44

A CALIBRATION SERVICE FOR CURRENT TRANSFORMERS

John D. Ramboz
Oskars Petersons

Abstract

A calibration service at the National Institute of Standards and Technology (NIST) for laboratory-quality current transformers is described. The service provides measurements of the current ratio and the phase angle between the secondary and primary currents. In the Report of Calibration or Test, the measured ratio is reported as the product of the marked (nominal) ratio and the ratio correction factor. The measured phase angle is reported directly in milliradians (mrad) and is positive if the secondary current leads the primary. The range of primary-to-secondary current ratios that can be measured with the equipment at NIST extends from 0.25 A:5 A to 12 000 A:5 A. The maximum current at the present time is about 20 000 A. Estimates of calibration uncertainties, including their sources, are given and quality control procedures are described. For routine calibrations, uncertainties of ±0.01% for the ratio and ±0.1 mrad for the phase angle are quoted. However, lower uncertainties—to ±0.0005% or 5 parts per million (ppm) for ratio and ±0.005 mrad or 5 μrads for phase angle—are possible under the provisions of Special Tests.

Key words: calibration; current transformers; electric power; electric standards; NIST calibration service.

1 INTRODUCTION

1.1 General Requirements

The accurate measurement of electric energy at currents typically found in utility distribution systems relies on three key components: a watthour meter, a voltage transformer, and a current transformer. The voltage and current transformers used in this application are known as instrument transformers. For polyphase power systems, multiple transformers and meters may be used. Errors in any of these devices can lead to energy measurement errors. The National Institute of Standards and Technology

(NIST) provides calibration services for laboratory standards for each of these devices. This Special Publication describes the service offered for the calibration of current transformers. Other NIST publications describe calibration services for wattmeters and watthour meters [1] and voltage transformers [2].

In measurement applications, one must know the true current ratio of the current transformer and also the phase angle between the current phasors. In the Report of Calibration (or the Report of Test) [3],[1] the measured ratio is reported as a product of the marked (nominal) ratio and the ratio correction factor (RCF). The measured phase angle is reported directly in milliradians (mrads). The phase angle is positive if the secondary current leads the primary current. Depending upon the quality of the current transformer and its intended use, the calibration results can be used to apply the corrections to the nominal ratio, or to verify that the true ratio of the transformer is sufficiently close to the nominal ratio that no corrections are required. Under ideal conditions, the actual current ratio is exactly equal to the marked (nominal) ratio and there is no phase angle displacement between the primary and the /secondary currents.

The need exists to measure currents in power circuits over a wide range, typically from a few amperes to several thousand amperes and even higher in special applications. Most current transformers operate adequately over a 10-to-1 dynamic range. In addition, multiratio transformers that cover a large range of current ratios are in use by electric utilities. Many 50-Hz and 60-Hz transformers are used for metering and relaying applications. These can be calibrated at NIST for the range of the primary-to-secondary current ratios from 0.25 A:5 A to 12 000 A:5 A. The maximum available current at the present time is 20 000 A, limited by the power supply. Military, marine, and aerospace applications, often employ 400-Hz instrument transformers. These can be calibrated to the maximum current of about 1200 A.

The relevant American National Standard, ANSI/IEEE C57.13–1978 [4], mentions relatively modest accuracies, with the calibration uncertainties to ±0.1% for current ratios and ±1 mrad for phase angle and corrections to ±0.3% and ±5 mrad for instrument transformers in actual metering applications. Lower calibration uncertainties, typically ±0.01 % and ±0.1 mrad, are required for instrument transformers that are used as standards to calibrate other transformers. Besides for metering and control applications, instrument transformers and similar devices are used in impedance bridges and test sets to measure the efficiency of electrical equipment. The accuracy requirements in those applications may extend to uncertainties as low as a few parts per million (ppm) and microradians (μrad).

This Special Publication discusses the NIST facility for the calibration of current transformers, the calibration procedures used, the methods employed to verify proper functioning of the calibration system, and the errors in the calibration process. In addition, this Introduction contains a brief presentation of transformer principles,

[1] Consult the cited reference for the differences between the two types of reports

a discussion of the various types of precision transformers and the nature of their errors, and a summary of the terminology pertaining to current transformers. The Appendix presents information for submitting transformers to NIST for calibration.

1.2 Principles of Transformers and Nature of Their Errors

A typical laboratory-grade current transformer consists of a toroidal, ferromagnetic core on which are placed the primary and the secondary windings with N_1 and N_2 turns, respectively, as in figure 1a. The core is constructed by winding a continuous ferromagnetic tape in a toroidal form. High permeability is desirable over a wide range of flux densities to ensure linear operation and low errors. Hence, nickel-iron alloys are used as the core materials in the most demanding applications. The design objective is to achieve in a practical transformer the characteristics that approach those of an ideal transformer, namely, the actual current ratio being nearly equal to the reciprocal of the turns ratio, i.e.,

$$I_1/I_2 \approx N_2/N_1. \tag{1}$$

With modern materials and construction techniques, the ideal characteristics can be approached to a high degree to within $\pm 0.01\%$ and even better in some cases. However, imperfect magnetic coupling between the windings and energy losses in the windings and the core prevent attaining fully the conditions of an ideal transformer.

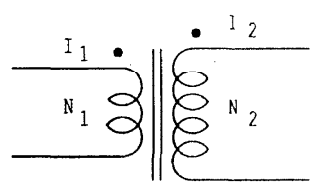

(a) Circuit Diagram

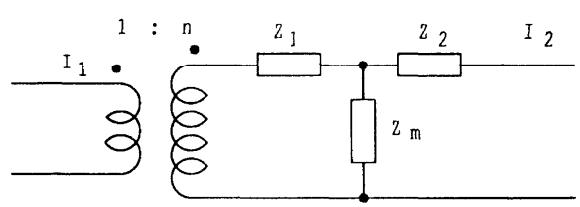

(b) Equivalent Circuit

Figure 1. Two-Winding Transformer

The conventional equivalent circuit of an actual transformer based on an ideal transformer and a T-network, figure 1b, explains why the actual transformer deviates from ideal. While the T-network representation applies to any network with two pairs of terminals, it is particularly useful for low-frequency transformers, since the equivalent impedances have meaningful physical counterparts. Z_m is the magnetizing impedance; Z_1 and Z_2 are the primary and secondary leakage impedances; and $n = N_2/N_1$ is the ratio of the ideal transformer. While Z_1 and Z_2 are reasonably constant, Z_m is not as a result of the nonlinear nature of the magnetic core.

The actual operation of a current transformer is illustrated in figure 2a. At the left is a current source whose output is being measured. At the right is a measuring device with its own internal impedance, Z_B, referred to in instrument transformer practice

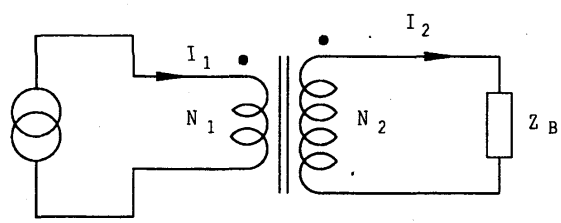

(a) Circuit Diagram

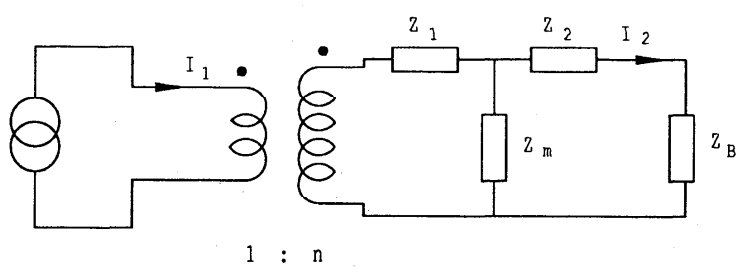

(b) Equivalent Circuit

Figure 2. Current Transformer Connected to Source and Burden

as the burden impedance. Substituting the equivalent circuit of figure 1b for the transformer in figure 2a, the equivalent circuit is obtained and shown in figure 2b. In that circuit, the actual current ratio becomes

$$I_1/I_2 = (N_2/N_1)[1 + (Z_2 + Z_B)/Z_m]. \tag{2}$$

The above is a complex ratio having real and imaginary parts accounting for the ratio correction factor and the phase angle. The above equation indicates that the magnetizing, the secondary leakage, and the burden impedances all affect the actual

ratio. The primary leakage impedance, Z_1, has no effect on the current ratio. In practice, the designer of a current transformer will minimize the ratio corrections and phase angle subject to other construction, operational, and economic constraints. In operation, the smallest possible burden impedance is desirable. Because of the nonlinear nature of the transformer (Z_m being current dependent), the corrections are affected by the current and the burden impedance.

1.3 Terms Related to Transformer Calibration

When employing an instrument transformer in critical measurement applications, the user is interested in the magnitude of the true ratio of the primary to the secondary currents and the phase angle between them. There are several ways to express such a complex ratio. Furthermore, there are variations in the use of terms that relate to measurement errors and corrections. In this section, several frequently used terms are explained and defined. Inasmuch as possible, the terminology developed through consensus standards is retained.

The following terms are consistent with the formally defined terms of ANSI/IEEE C57.13–1978:

Marked ratio. The ratio of the rated primary current to the rated secondary current as stated on the name plate.

Ratio correction. The difference between the ratio correction factor and unity. It is usually expressed in percent, but can also be expressed as a fraction (in per unit) or, for very accurate transformers, in parts per million (ppm).

Ratio correction factor (RCF). The ratio of the true transformer ratio to the marked ratio. The primary current is equal to the secondary current multiplied by the marked ratio times the ratio correction factor.

Phase angle. The phase displacement between the primary and the secondary currents. It is positive when the phasor of the secondary current leads that of the primary current.

True ratio. The ratio of the primary current to the secondary current under specified conditions.

Turns ratio. The ratio of the primary winding turns to the secondary winding turns. The turns ratio may or may not be numerically equal to the reciprocal of the marked ratio. To bring the ratio correction factor nearer to unity, turns may be added to or deleted from one of the windings.

Besides the above, the following terms are also found in the technical literature:

Nominal ratio. This term is usually used as a simple number and is sometimes substituted for the marked ratio. For example, the marked ratio of a current transformer might be 1200 A:5 A, the corresponding nominal ratio is 240 or 240:1.

In-phase correction. The in-phase component between the phasors representing the secondary current and the nominal secondary current (primary current divided by the nominal ratio). This correction is normalized by dividing it by the secondary current and it is nearly the same as the ratio correction defined previously.

Quadrature correction. The normalized quadrature component between the phasors representing the secondary current and the nominal secondary current. For small phase angles, the quadrature correction is nearly numerically equal to the phase angle in radians.

The preceding definitions can be illustrated by the use of phasor diagrams. The mathematical ratio of the primary and secondary current phasors of a current transformer is illustrated in figure 3 both in polar and Cartesian coordinates. In polar coordinates the relationship is given by

$$I_1/I_2 = n(1+a)e^{-jb}, \tag{3}$$

where I_1 and I_2 are the primary and secondary currents, respectively, n is the marked ratio; $(1 + a)$ is the ratio correction factor; a is the ratio correction; and b is the phase angle in radians. The phasor diagram of figure 3a illustrates the quantities in eq. (3). The Cartesian form of the relationship is readily obtained from eq. (3)

$$I_1/I_2 = n(1+a)(\cos b - j\sin b) = n(1 + a_1 - jb_1), \tag{4}$$

where a_1 and b_1 are usually denoted as in-phase and quadrature corrections, respectively. For small angles, a and a_1 are nearly equal, as are b and b_1. The diagram of figure 3b illustrates the Cartesian coordinate representation.

The transformer-specific definitions for the general terms "error" and "correction" need clarification. In the technical literature on instrument transformers, the term "error" has two meanings–(a) an uncertainty in the knowledge of the true ratio; and, (b) a known deviation from the marked (nominal) ratio or the turns ratio. In this report, the term "error" used in the former sense, i.e., for uncertainties in the measurement is always referred to as an "uncertainty." For known differences between true and nominal ratios, the term "correction" is used in the sense that the correction is added to the nominal value to obtain the true value. There are cases in instrument transformer application where it is not practical or necessary to

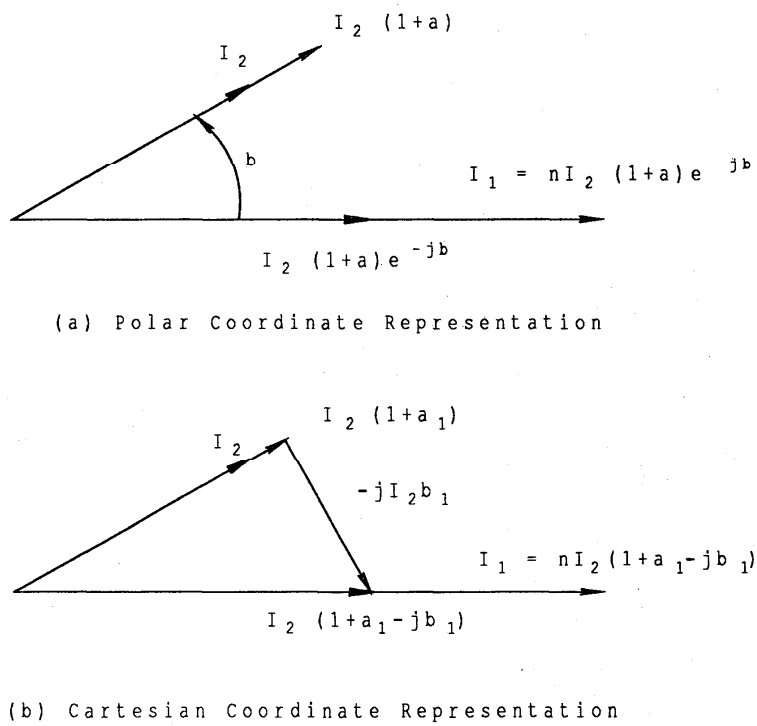

Figure 3. Phasor Diagrams Illustrating Terms Used With Instrument Transformer Ratios

apply known corrections to the measurement or calibration results, because either the corrections are small and thus relatively insignificant or the application is too complicated. In those cases, the nominal ratio is used but the error of the transformer is estimated by also considering the known but unapplied corrections.

1.4 Other Precision Transformer-Like Devices

The technology of precision transformers used as ratio devices for voltage and current in various applications has been highly developed. In fact, transformers are generally considered the most accurate scaling devices at power and audio frequencies with stabilities in the range of parts in 10^9 and corrections in the range of parts in 10^8. These highly accurate transformers and transformer-like devices have influenced current transformer calibration practice. Standard transformers and calibration equipment incorporate such devices.

Precision transformers have increased the accuracy demands on calibration laboratories by one to two orders of magnitude. A large number of publications on specialized transformers are available in the technical literature. A reference book

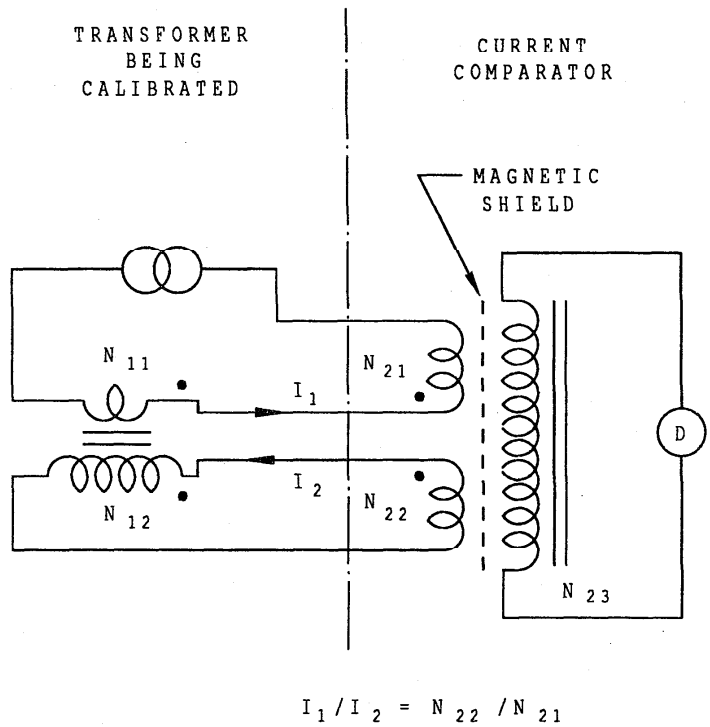

Figure 4. Current Comparator (at Right) Used to Calibrate a Current Transformer (at Left)

by Moore and Miljanic [5] describes some of them and also provides further references. Four specialized types of transformers are summarized here.

1.4.1 Current Comparator

The current comparator is a three-winding current transformer (figure 4 at right) operated with zero flux in the core. The current is supplied to two of the windings, N_{21} and N_{22}, and the presence of magnetic flux is monitored via the induced voltage in the winding N_{23}. At the ampere-turn balance ($I_1 N_{21} = I_2 N_{22}$) there is zero voltage and current at the detector (D). The correspondence between the current ratio and turns ratio is very high, at least within a 1 ppm for well-designed devices. To insure that the windings N_{21} and N_{22} are coupled to N_{23} only through the flux in the core (a necessary condition for high accuracy), magnetic shielding is required to eliminate the adverse effects of the leakage flux between the windings as shown.

A current comparator can be used to calibrate a regular two-winding current transformer as shown in figure 4. Additional circuitry is required to balance the calibration circuit if the current transformer at the left has ratio and phase angle corrections.

1.4.2 Two-Stage Transformer

A regular current transformer can be combined with a three-winding transformer operated in a differential mode (figure 5a). This transformer can then be used as a reference standard. The three-winding transformer supplies the error current of the regular current transformer and the total secondary current approaches that value which is dictated by the turns ratio. A separate burden is required for the three-winding transformer. The three-winding transformer is magnetically shielded with the considerations for shielding identical to those of the current comparator. The entire device can be constructed as a single transformer with the two cores placed adjacent to each other (figure 5b) and by winding N_1 and N_2 on both cores and N_3 only on one core. In the diagram, a winding links all the cores to the right of the winding but not those cores to the left of the winding. The two-stage technique results in very accurate transformers that have corrections of a few parts per million or even smaller.

1.4.3 Amplifier-Aided Transformer

Numerous circuits combining transformers with amplifiers have been used for improving the accuracy of transformers. An elementary circuit is shown in figure 6. The amplifier senses the residual flux in the core via the winding N_3 and then aids the transformer by forcing the current through the secondary winding to achieve ampere-turn balance. In this particular circuit the amplifier supplies nearly all the power to the secondary winding and the burden. In other, more complicated schemes, the amplifier supplies only the correction current. The amplifier-aided transformer may be used as a reference standard. Separate provisions must be made to balance the calibration circuits.

1.4.4 Compensated Current Comparator

This transformer is constructed by adding a detection winding to the two-stage current transformer as well as a source of power in series with the compensation winding (figure 7). The core at the right is operated in zero-flux condition, hence, the instrument is a true ampere-turn balance sensor. The adjustable voltage source, S, is required in the compensation winding in order to supply the current to this winding and balance the null detector, D. The power to the primary and secondary windings of the compensated current comparator can be supplied from a source in the primary winding or from a source in the secondary winding. The device is very accurate, versatile, and well-suited for calibration of current transformers. Current transformer calibrations at NIST employ compensated current comparators as reference standards.

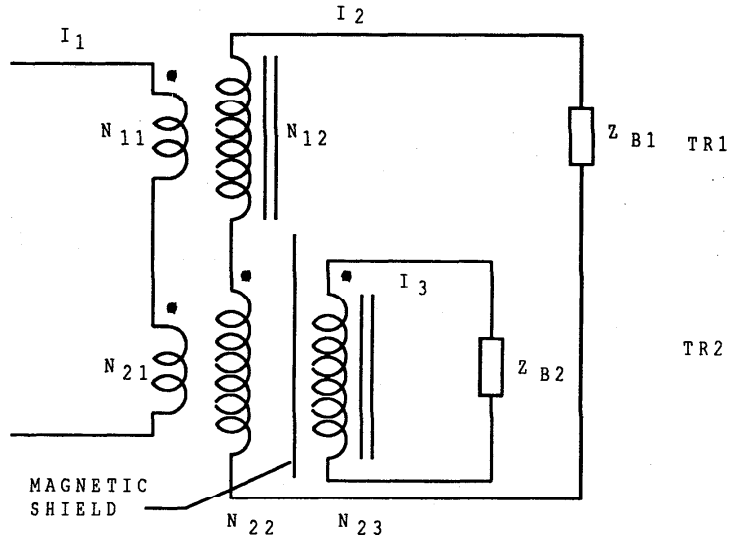

$N_{11}/N_{12} = N_{21}/N_{22}$

$N_{22} = N_{23}$

$I_1/(I_2 + I_3) = N_{22}/N_{21} = N_{12}/N_{11}$

(a) As Two Separate Transformers

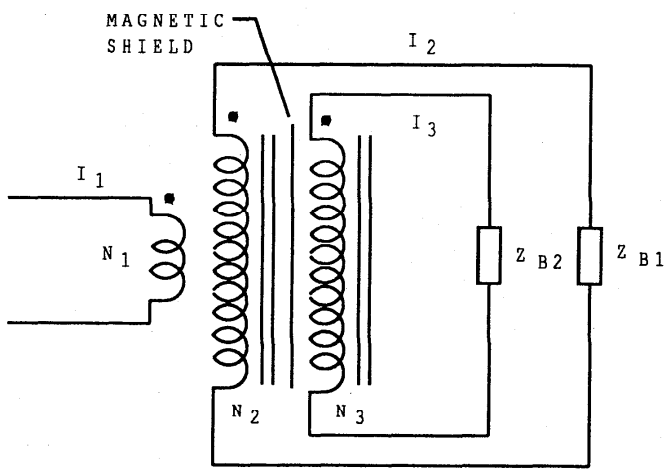

$N_2 = N_3$

$I_1/(I_2 + I_3) = N_2/N_1$

(b) As One Unit

Figure 5. Two-Stage Current Transformer

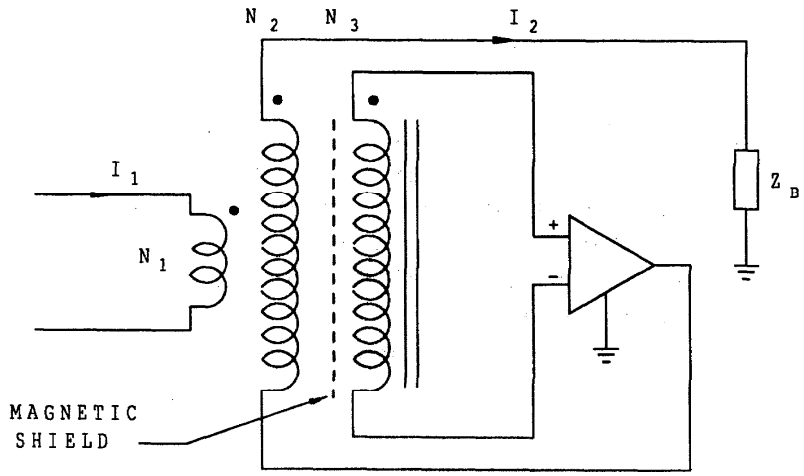

$I_1 / I_2 = N_2 / N_1$

Figure 6. Amplifier-Aided Transformer

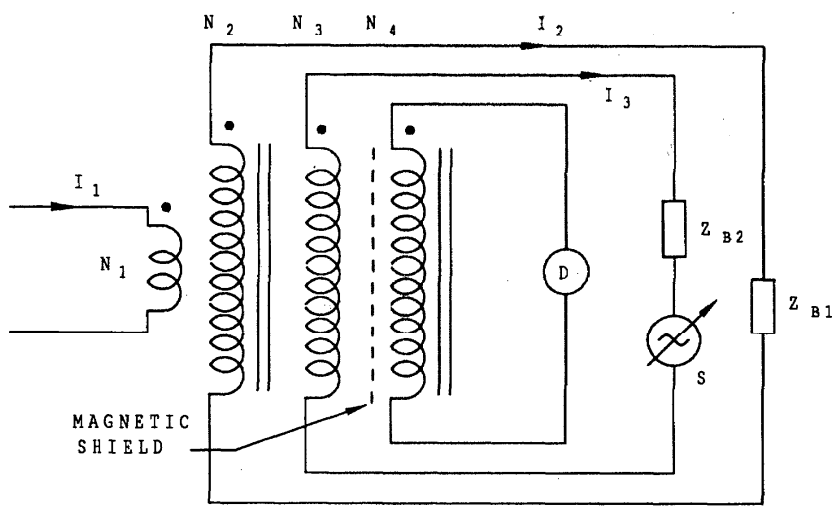

$N_2 = N_3$

$I_1 / (I_2 + I_3) = N_2 / N_1$

Figure 7. Compensated Current Comparator

2 CALIBRATION SYSTEM AT NIST

2.1 Calibration Circuits

Current transformers at NIST are calibrated by comparing the customer's transformer (referred to as the test transformer) to a standard current comparator whose corrections are negligibly small. In routine calibrations, the compensated current comparator shown schematically in figure 7 is used as the standard. A complete calibration circuit is shown in figure 8. In the circuit of figure 8, the primary windings of the test transformer, N_1, and the current comparator, N_{21}, are connected in series opposition. The secondary windings, N_2 and N_{22}, are also in series opposition. In

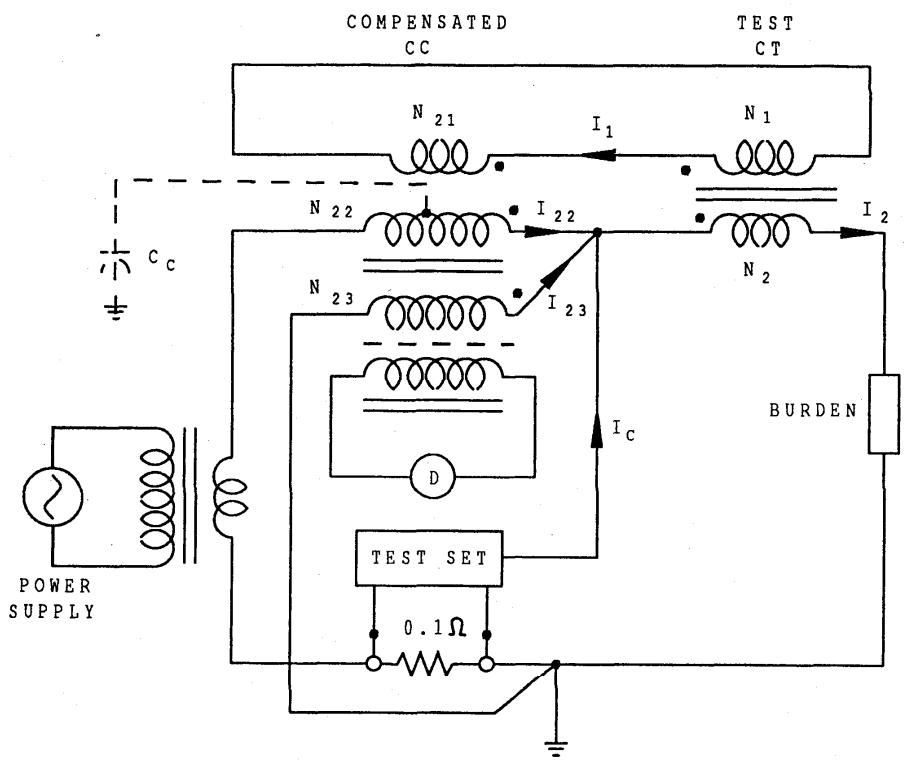

$$N_{23} = N_{22}$$
$$N_{22}/N_{21} = N_2/N_1 = n$$
$$I_1/I_2 \approx n[1 - I_C/(I_{22}+I_{23})]$$
$$\approx n[1 - I_C/I_2]$$

C_C -- CAPACITIVE ERROR COMPENSATION

Figure 8. Current Transformer Calibration With a Compensated Current Comparator, Secondary Feed

addition, the compensation winding and the output of the test set are connected to the junction of N_2 and N_{22}. The power source and a current-sensing shunt for the input of the test set are in series with N_{22}. For a test transformer having no corrections, the secondary current of the test transformer is equal to the combined secondary and compensation currents of the compensated current comparator,

$$I_2 = I_{22} + I_{23}, \tag{5}$$

and the correction current, I_c, of the test set must be zero for the null condition at D, the detector. If the test transformer has a significant correction, eq (5) must be modified,

$$I_2 = I_{22} + I_{23} + I_c. \tag{6}$$

In accordance with eqs (3) and (4) defining transformer corrections

$$I_2 = I_1/[n(1+a)e^{-jb}]I_2 \approx I_1/[n(1+a-jb)]. \tag{7}$$

The combined currents I_{22} and I_{23} represent the nominal secondary current. Thus

$$I_{22} + I_{23} = I_1/n. \tag{8}$$

The correction current, I_c, is a small, adjustable fraction of the nominal secondary current. It can be defined as

$$I_c = (I_1/n)(-\alpha + j\beta). \tag{9}$$

Substituting eqs (7–9) in eq 6, yields

$$1/(1+a-jb) = 1 - \alpha + j\beta. \tag{10}$$

If the correction terms are small,

$$a \approx \alpha, \text{and}\, b \approx \beta. \tag{11}$$

The adjustments of the test set, α and β, are designed to be direct reading for the ratio correction and phase angle of the transformer.

The circuit shown in figure 8 is generally used for primary currents ranging between 5 and 1200 A (nominal ratios between 1:1 to 240:1). This configuration in which the supply is connected in the transformer's secondary circuit, is known as the secondary feed configuration. The supply is required to provide only the secondary current. Under normal circumstances, this does not exceed 5 A. However, the voltage might be relatively high, especially for the larger ratios and higher primary currents. The mid-range compensated current comparator that is mainly used with the secondary feed can be excited up to 200 V at 50 and 60 Hz when used in this configuration. This is generally adequate for the largest ratios and the largest primary currents.

The compensated current comparator serves both as a precision ratio device and as a power transformer, transferring in this case the power from the secondary to the primary winding. The power requirements in the primary circuit are usually larger than in the secondary circuit. Hence, the compensated current comparator in the secondary feed configuration has to transfer more power. This, in turn, could lead to larger error in the measurement system. Relatively large voltage in the secondary winding causes capacitive currents that result in an error in the current ratio of a current comparator. The compensation current in the secondary-feed configuration can be high causing significant voltage at the junction of the secondary windings. This voltage imposes an additional burden on the test transformer. Nevertheless, these shortcomings can be controlled in current comparators that have moderate ratios as indicated previously.

For the primary currents greater than 1200 A, the circuit of figure 9 is used in which the power source is connected in series with the primary windings. This is known as the primary feed configuration. It is more accurate and is the only viable configuration for large currents in excess of a few thousand amperes. Calibration of transformers whose ratios are smaller than one presents special problems because of the large impedance that is reflected into the primary winding and potentially large capacitive currents. The difficulty is overcome by adding an auxiliary current transformer to the circuit as shown in figure 10. This transformer supplies most of the power to the secondary circuit thus improving the performance of the compensated current comparator. Calibrations are routinely performed at 50, 60, and 400 Hz. They can be performed at other frequencies on a Special Test basis. Three compensated current comparators are employed in routine calibrations covering the range of ratios from 0.25 A:5 A to 12 000 A:5 A. The maximum current is limited by the power supplies to about 20 000 A for 50 and 60 Hz, and 1200 A for 400 Hz. The transformers are usually calibrated with the secondary currents between 0.5 A and 5.0 A (10% to 100% of the rated current), but calibration with lower currents is possible, sometimes at reduced accuracy. Short-term overcurrent tests usually can be performed at a 10-A secondary current.

Details of the test set and burdens used at NIST are discussed in the following sections.

2.2 Details of Compensated Current Comparators and Calibration Hardware

Three compensated current comparators are available for routine calibration of ratios that are normally requested by NIST clients. These are low-range, mid-range, and high-range current configurations. All the current comparators are constructed in accordance with the diagram of figure 7. All are rated for a secondary current of 5 A, but for different primary currents. Brief descriptions follow.

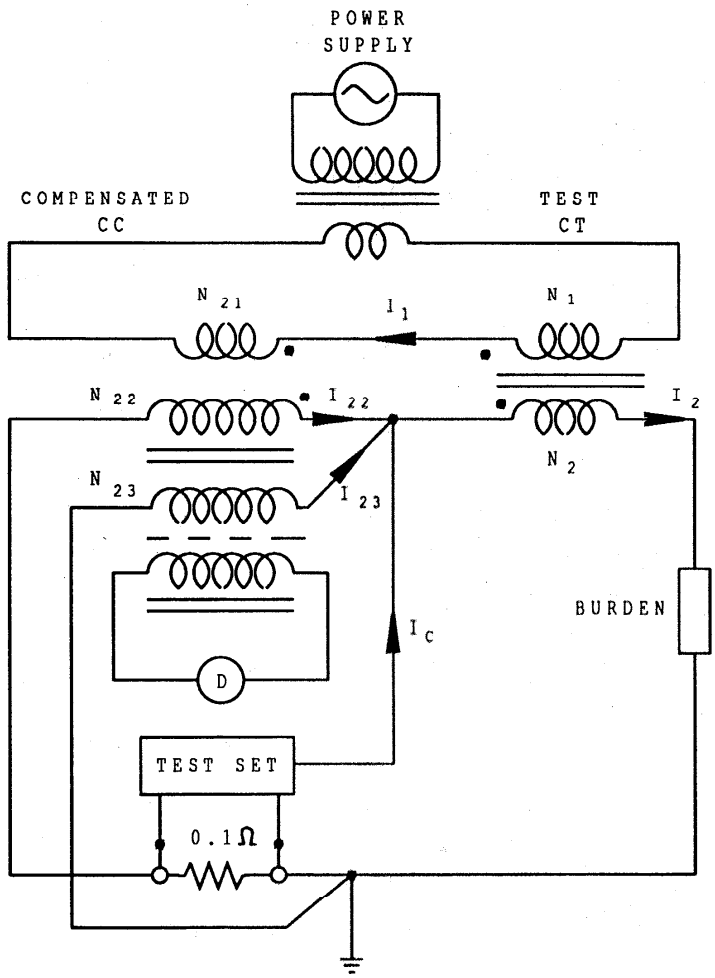

$$N_{23} = N_{22}$$

$$N_{22}/N_{21} = N_2/N_1 = n$$

$$I_1/I_2 \approx n[1 - I_c/(I_{22} + I_{23})]$$

$$\approx n[1 - I_c/I_2]$$

Figure 9. Current Transformer Calibration With a Compensated Current Comparator, Primary Feed

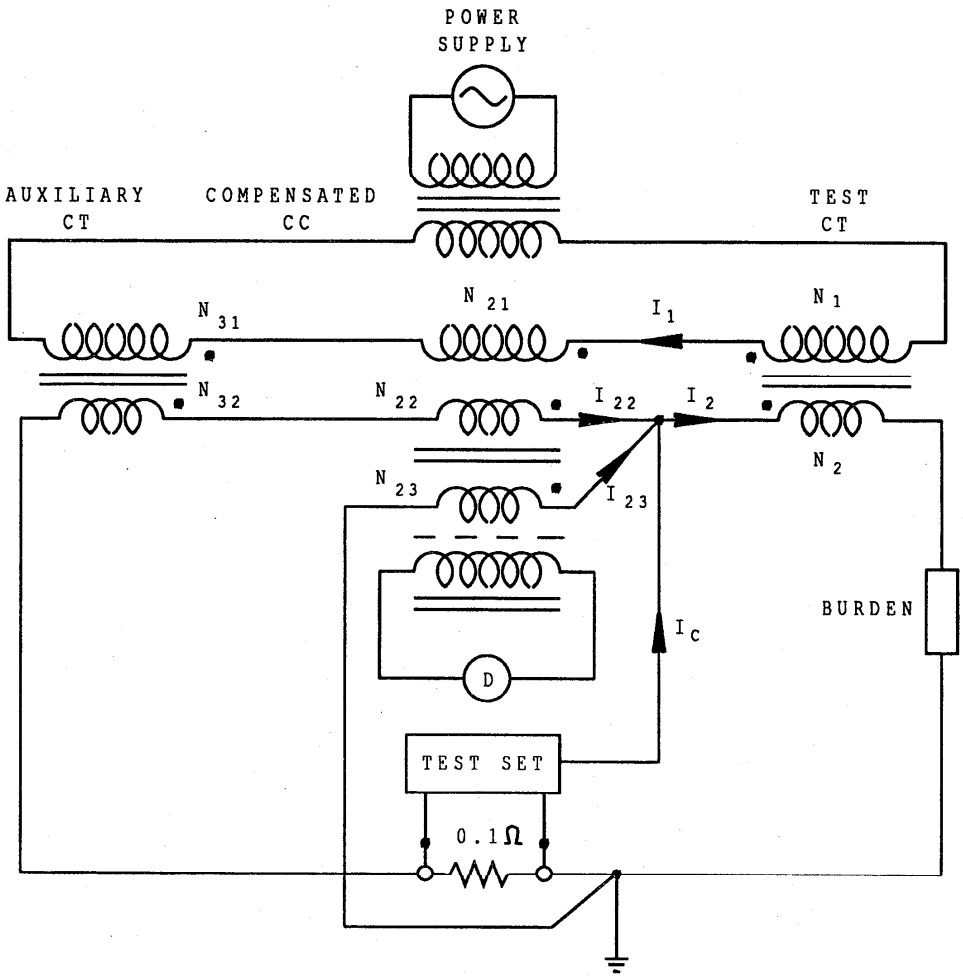

$$N_{23} = N_{22}$$

$$N_{22}/N_{21} = N_{32}/N_{31} = N_2/N_1 = n$$

$$I_1/I_2 \approx n[1 - I_C/(I_{22} + I_{23})]$$

$$\approx n[1 - I_C/I_2]$$

Figure 10. Calibration of a Current Transformer Having a Primary-to-Secondary Current Ratio Smaller Than One

Table 1. Turns Arrangement in the Low-Range Compensated Current Comparator
The primary winding has switch-selectable taps. The full-scale secondary current is 5 A.

FULL-SCALE PRIMARY CURRENT (Amperes)	NUMBER OF TURNS	
	Primary Winding	Secondary Winding
0.25	240	12
0.5	120	12
0.75	80	12
1.0	60	12
1.25	48	12
1.5	40	12
2.0	30	12
2.5	24	12
3.0	20	12
3.75	16	12
4.0	15	12
5.0	12	12

2.2.1 Low-Range Current Comparator

This current comparator is a "step-up" device, having a primary current that is smaller than the secondary current. The secondary and compensation windings each have 12 fixed turns. The primary winding has switch-selectable taps with the number of turns ranging from 12 to 240. The available turns ratios and primary currents are listed in table 1. The auxiliary transformer has the same turns ratio, but the number of turns is eight times greater with 96 in the secondary winding.

2.2.2 Mid-Range Current Comparator

The number of selectable turns in the secondary and compensation windings are 160, 200, and 240. The permanently placed primary turns range from 8 to 160 and are made available through series-parallel connection. Additionally, feed-through primary turns (turns through the window) are used for larger ratios. The turns arrangements and typical primary currents are tabulated in table 2.

2.2.3 High-Range Current Comparator

This current comparator is designed for primary currents rated to 12 000 A having a maximum of 2400 secondary turns and from 1 to 24 primary turns. The compensation winding is fixed at 1200 turns. A large number of nominal ratios and primary

Table 2. Turns Arrangement in the Mid-Range Compensated Current Comparator

The secondary and compensation windings can have 160, 100, or 240 turns each. The number of turns in the fixed primary winding can be selected between 8 and 260 by means of series-parallel interconnections. Additional primary turns can be added through the window in the transformer. The full-scale secondary current is 5 A. Typical rated primary currents are given in the table below.

PRIMARY WINDING (Number of Turns)	SECONDARY WINDING (Number of Turns)		
	160	200	240
Fixed Winding	Full-Scale Primary Current (Amperes)		
160	5	—	7.5
80	10	12.5	15
40	20	25	30
32	—	—	37.5
20	40	50	60
16	—	—	75
10	80	100	120
8	—	125	150
Turns Through Window			
5	160	200	—
4	—	250	300
2	400	500	600
1	800	1000	1200

currents are available as shown in table 3 by utilizing the different combinations of the number of turns in both windings. A small current transformer is cascaded to the compensation winding to obtain an effective number of compensation turns from 1200 to 2400.

2.2.4 Sensitivity Considerations

The sensitivity of current comparators can be expressed in a form of a transimpedance per turn, defined as the ratio of the voltage in the detection winding to the ampere-turns of excitation in the ratio windings. For the sizes and types of magnetic cores that are used in typical current comparators, the transimpedance is about 10 ohms per turn (10 volts per ampere-turn). The actual measured values are as follows: for the low-range current comparator, 6.5 ohms per turn; mid-range, 11 ohms per turn; high-range, 10 ohms per turn.

Consider the following example: assume the sensitivity figure of 10 volts per ampere-turn, one ppm unbalance in a 0.5-A secondary current, and a 100-turn secondary winding. These quantities yield a 500-μV signal at the terminals of the detection winding. This signal is about two orders of magnitude larger than the noise and interference level in a typical laboratory operation of this type. Obviously, the sensitivity of current comparators is not a problem in current transformer calibration.

Table 3. Turns Arrangement in the High-Range Compensated Current Comparator

The secondary winding has a switch-selectable number of turns from 1200 to 2400 in 20-turn increments. The same effective number of turns is obtained in the compensation winding through a fixed 1200-turn winding and a cascaded transformer. The primary winding can have 1 to 24 turns as shown in the table. They are selectable through series-parallel interconnection. The full-scale secondary current is 5 A. Typical primary currents are tabulated below. A larger number of other ratios are possible with different secondary number of turns.

PRIMARY WINDING (Number of Turns)	SECONDARY WINDING (Number of Turns)			
	1200	1600	1800	2400
	Full-Scale Primary Current (Amperes)			
1	6000	8000	9000	12000
2	3000	4000	4500	6000
3	2000	—	3000	4000
4	1500	2000	2250	3000
6	1000	—	1500	2000
8	750	1000	1125	1500
12	500	—	750	1000
24	250	—	375	500

2.2.5 Accuracy Evaluation of Current Comparators

The current comparators themselves are the minor contributors to the overall uncertainty. They are designed to have corrections that are negligible for routine calibrations. The performance of the current comparators have been evaluated by indirect tests of the magnetic and capacitive errors. All three current comparators described above have been rigorously calibrated at selected ratios to validate the results of these indirect tests. The results are presented in section 4 of this report.

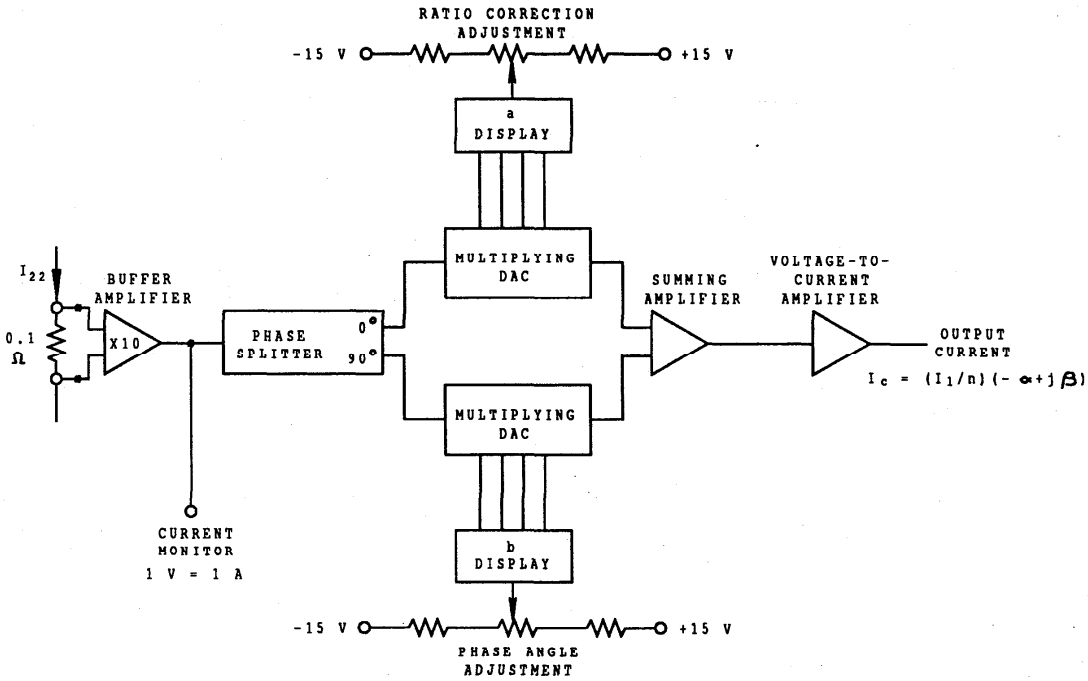

Figure 11. Test Set Used to Sense Secondary Current in the Current Comparator and to Generate a Correction Current

2.3 Test Set

The calibration technique requires the injection of a small known current, equal to the difference between the currents of the current comparator and the test transformer, at the junction of the secondary windings. This is shown in figures 8, 9, and 10. An electronic test set is used to sense the secondary current in the current comparator and generate a correction current given by eq. (9) [6]. Figure 11 shows a block diagram of the test set. The secondary current, I_{22}, is passed through a precision four-terminal shunt, thus generating a voltage signal at the input of the test set. The test set input impedance of 20 kΩ presents negligible loading on the shunt. The test set then generates in-phase and quadrature signals. By the use of multiplying digital-to-analog converters, each signal is separately scaled by an adjustable amount selected by variable controls on the test set. The signals of two channels are then summed and converted to a current which is used to bring the current comparator into balance as indicated by a null condition in the detector. With this arrangement, the correction current is always proportional to the secondary current of the current comparator, I_{22}. Small changes and drifts in the secondary current therefore do not influence the balance. Furthermore, I_{22} is sufficiently close to the nominal secondary current, I_1/n, which satisfies the balanced conditions of eq (10) and the approximation of eq (11).

Selectable ranges are available (not shown in diagram) which generate full-scale balancing currents of 100 ppm, 1000 ppm, and 10000 ppm of the nominal secondary current I_1/n, and phase angles of 100 μrad, 1000 μrad, and 10000 μrad. The phase and amplitude of the quadrature current is direct reading for frequencies of 50, 60, and 400 Hz. The frequency selection is made by means of a front panel switch. Transformer calibrations at other frequencies may be done by scaling the phase reading by the ratio of the measurement frequency to the frequency indicated by the dial setting. The test set has two three-digit panel meters which indicate the test transformer correction and phase angle directly in parts per million and microradians, respectively.

Test set components are selected and internal adjustments made so that the error in I_c is less than $\pm 0.5\%$ at frequencies of 50 and 60 Hz, and less than $\pm 1\%$ at a frequency of 400 Hz. Because the test set must generate only a current equal to the correction of the test transformer, the test set output need not be very accurate. If, for example, a test transformer has a ratio error of 100 ppm, and the test set current is known to within 0.5%, an overall measurement uncertainty of only 0.5 ppm results. There is a small fixed uncertainty of about 1 ppm attributable to the test set.

2.4 Burdens

Burdens are selected using stable values of resistance and inductance combined in a burden box made at NIST. It is capable of carrying currents up to 10 A. Incremental values of resistance in 0.01-Ω steps up to 1 Ω can be selected. External resistance of 1, 2, and 3 Ω can be added for burdens requiring larger impedances. Incremental values of inductance in 0.01-mH steps up to 1 mH can be similarly selected. External inductance of 1, 2, 5, and 10 mH can be added for larger burdens.

The value of the burden in terms of resistance and inductance is measured for every burden selected for calibration. This process is discussed in section 3.4. The secondary connecting leads and contact resistance contribute to the impedance of the burden and can change if the transformer is disconnected and reconnected. This is especially true for near-zero burdens. As the impedance of the burden becomes larger, the effects of leads and contacts diminish.

The accuracy to which the burden is set varies with the magnitude of the burden. At very low-impedance burdens, the accuracy is limited by the resolution of the burden box (0.01 Ω resistance and 0.01 mH inductance). The measurement accuracy for the resistive part is $\pm(0.002\ \Omega + 2\%$ of the value). Similarly for the inductive part it is $\pm(0.002$ mH $+ 2\%$ of the value). For most transformer calibrations, this is sufficient and will contribute only small errors which are accounted for in the overall uncertainty statement assigned to the Report of Calibration (or Report of Test).

2.5 Sources of Excitation

The test currents are derived from one of two sources, depending on the current required. For most of the calibrations performed, electronically generated sinusoidal voltages are obtained from a 1500 volt-ampere (VA) electronic power supply. It has four selectable voltage ranges of 30, 60, 120, and 240 volts using series and parallel combinations of transformer windings contained within the supply. It is used at power frequencies and at audio frequencies up to 1 kHz with low range and mid-range current comparators. An electronic counter and a phase-lock circuit are used to synchronize the generator with the power-line frequency for tests performed at 60 Hz. This helps to reduce beat-frequency problems.

The second excitation source is a 54-kVA electronic power amplifier and special high-current supply transformer capable of delivering 20 000 A in its secondary. This combination drives a coaxial current cage and the high-range current comparator which operates over current ratios of 250 A:5 A to 12 000 A:5 A. The power source can be operated over a frequency range from about 40 to 5000 Hz. At higher frequencies, the current capability is greatly reduced because of circuit inductances. An electronic counter is used to measure the test frequency. The test frequency is usually maintained to within 0.1 Hz of the desired frequency during the calibration process.

3 CURRENT TRANSFORMER CALIBRATION PROCEDURES

3.1 Summary of Procedures

The procedure for the calibration of current transformers at NIST involves the following steps:

- initial preparation for the calibration,
- demagnetization of the transformer,
- selection of the test transformer secondary burden,
- determination of ratio correction and phase angle,
- summarization of the measurement results and assessment of measurement uncertainties,
- comparison of the results with historical and/or expected performance data, and

- preparation of the Report of Calibration (or Report of Test), and final review and approval.

Each of these is discussed below.

3.2 Initial Preparation

Upon receipt of the current transformer from a customer, the transformer is visually inspected to ensure that no apparent damage was incurred during transit. If damage is obvious, the customer is notified and steps are taken to return the device. If damage is suspected, the transformer's performance is verified. Connections and terminal conditions are also noted. If no significant corrosion or oxide accumulations on the terminals is obvious, then the calibration process is continued. If only a minor amount of oxide is present, the terminals may be cleaned before proceeding. If excess oxide is present or corrosion is severe, the customer is notified and the transformer is returned uncalibrated. No repairs or major cleaning are normally performed by NIST. In some instances, NIST staff may have suggestions for customers regarding possible corrective action.

Records are checked to determine if a particular transformer has been previously calibrated at NIST. If so, the historical calibration data are reviewed to determine if any unusual conditions or performance may have existed. After the calibration has been completed, the present results are compared to the historical data as discussed later. The order is reviewed to ensure that the test conditions stated are understood and can be satisfied; if not, the customer is contacted for clarification.

3.3 Demagnetization

To ensure a reliable calibration, current transformers must have no residual core magnetization. Generally, the demagnetization is a simple and quick procedure which makes certain that no residual magnetic flux exists in the core. A circuit such as shown in figure 12 is used. An ac power source (variable voltage supply), ammeter, and voltmeter are connected to the secondary terminals of the current transformer. The primary circuit is left open.

The source is energized, but left at a zero output. The switch in series with the ammeter and transformer is then closed, and the source voltage is slowly increased while the ammeter is being carefully observed. As the voltage increases across the transformer winding, very little current exists because of the high magnetizing impedance. Above some voltage level, however, the current will rapidly increase as the transformer core reaches magnetic saturation. The source voltage is slowly increased until the rated secondary current (usually 5 A) is noted on the ammeter. At the

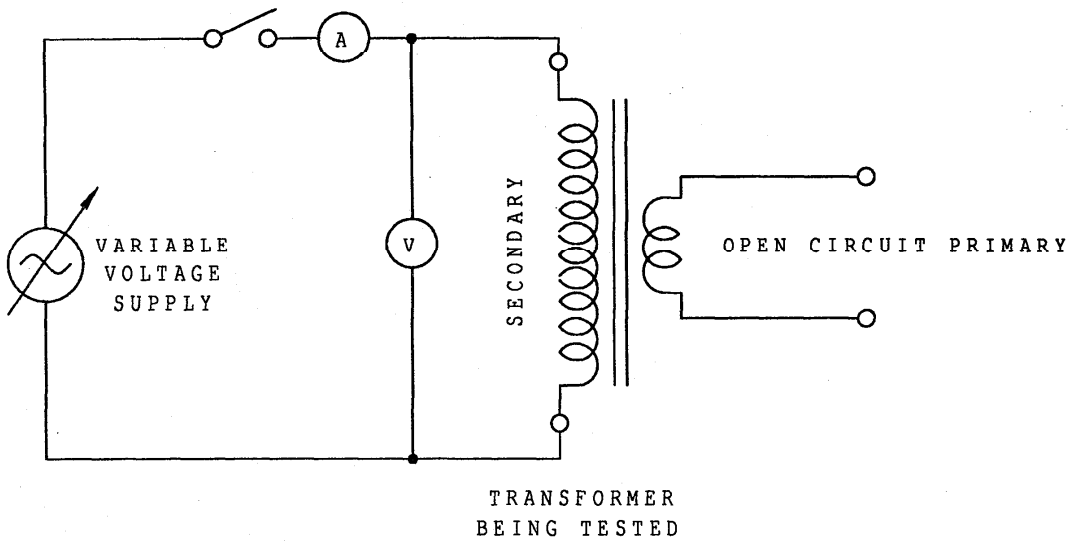

Figure 12. Demagnetization Circuit

same time, the voltmeter reading is also noted. The source voltage is then slowly decreased to zero, and the switch is opened. The source is then turned off. Both the current and voltage values are recorded on the laboratory data sheet. This completes the demagnetization procedure. The switch in the series circuit is a guard against current transients or surges which might be generated by the power source when it is turned on and off. If such a surge were to occur after the above demagnetization procedure was completed, transformer remagnetization might occur. Opening the switch prior to turning off the source prevents magnetizing surges from reaching the transformer.

For some transformers, the secondary impedance may be extremely high and may require several hundred volts for core saturation. Transformers may have multiple secondary and primary windings, in which case high voltage may also be present at other transformer terminals. Precautions must be exercised against the hazards of electric shock.

Occasionally, the ac power source will not be able to develop a sufficiently high voltage to drive the core into saturation. If additional windings are available, the selection of a winding having fewer turns (and hence a lower impedance) can sometimes be used. For convenience, the frequency used for demagnetization is generally 60 Hz. However, when insufficient supply voltage prohibits demagnetization, the source frequency can be reduced to 40 Hz, for example, and another attempt made. Lowering the frequency lowers the reactive impedance of the transformer winding and the saturation voltage. The winding and demagnetization frequency used are noted on the laboratory data sheet.

For some window-type transformers having a single-fixed secondary, demagnetization at even 40 Hz may not be achievable within the limits of the source voltage. In this case, a special 40-conductor cable is fed several times through the window forming an additional winding. Because of the small gauge wire, the current through the cable is limited to about one ampere. For each turn through the window, 40 ampere-turns link the transformer core. It is almost always possible to find a configuration which saturates the core.

3.4 Burden Selection

The process of selecting and setting the burden for the secondary winding of the current transformer must be completed prior to calibration data collection. The customer specifies the burden or burdens at which the calibration is to be performed. Burdens can be specified in any one of the following ways:

1. by specifying the series resistance and inductance,
2. by specifying the volt-ampere load and power factor (a 5-A secondary current is assumed unless otherwise stated),
3. by requesting a standard ANSI burden as defined in ANSI/IEEE C57.13–1978 (see table 4), or
4. by supplying the burden and leads with the transformer.

If the burden is specified by either (2) or (3) above, the appropriate values of resistance and inductance are calculated and used. When the burden is given in terms of volt-amperes (or, more precisely, average phasor power) and power factor, the resistance is calculated from the relationship

$$R = [S/I_2^2](\mathrm{PF}), \tag{12}$$

and the inductance is calculated from the relationship

$$L = 1000[S/\omega I_2^2][1 - (\mathrm{PF})^2]^{\frac{1}{2}}, \tag{13}$$

where

R is the series resistance of the burden (ohms),

L is the series inductance of the burden (millihenries),

S is the volt-ampere product or the average phasor power,

Table 4. Standard ANSI/IEEE C57.13–1978 Burdens

The following table is excerpted from the American National Standards Institute publication C57.13-1978, American National Standard Requirements for Instrument Transformers [4]. Described are secondary burdens for current transformers with 5-A secondaries. If a current transformer is rated at other than 5-A, ohmic burdens for specification and rating shall be derived by multiplying the resistance and inductance of the table by [5/(ampere rating)]. The VA at rated current, power factor, and the burden designation remain the same. These standard burden designations have no significance at frequencies other than 60 Hz.

BURDEN DESIGNATION	STANDARD BURDEN FOR CURRENT TRANSFORMERS WITH 5-A SECONDARIES				
	Resistance (Ω)	Inductance (mH)	Impedance (Ω)	Volt-amperes (at 5 A)	Power Factor
Metering Burdens					
B-0.1	0.09	0.116	0.1	2.5	0.9
B-0.2	0.18	0.232	0.2	5.0	0.9
B-0.5	0.45	0.580	0.5	12.5	0.9
B-0.9	0.81	1.04	0.9	22.5	0.9
B-1.8	1.62	2.08	1.8	45.0	0.9
Relaying Burdens					
B-1	0.5	2.3	1.0	25	0.5
B-2	1.0	4.6	2.0	50	0.5
B-4	2.0	9.2	4.0	100	0.5
B-8	4.0	18.4	8.0	200	0.5

$\omega = 2\pi f$, where f is the test frequency,

I_2 is the rated secondary current (assumed to be 5-A, unless otherwise stated), and

(PF) is the power factor.

If the burden is stated in terms of the standard ANSI/IEEE C57.13–1978 burden, the values of resistance and inductance specified in the ANSI/IEEE document [4] are used. Table 4 is a copy of table 11 of ANSI/IEEE C57.13-1978 which gives the characteristics of the specific standard burdens. The ANSI-specified burdens are defined only at a frequency of 60 Hz. Occasionally a 50-Hz calibration will be requested with an ANSI burden. In this instance, it is assumed that the values of resistance and inductance apply as given in table 4.

Sometimes a current transformer submitted for calibration will be accompanied with a particular burden (for example, a shunt and the connecting leads, or a test set with leads). The added minimum burden of the calibration facility can be maintained within 0.03 Ω for resistance and 20 μH for inductance. These same minimum values

also apply when "zero" burden is requested. They represent the added leads and other impedances of the NIST equipment.

The NIST test set itself is used for accurate determination of the burden impedance, including the contribution from leads. The procedure involves connecting a 1000-Ω resistor (or another resistance with appropriate value) directly to the secondary terminals of the test transformer thus shunting some of the current that would normally flow through the burden impedance and the test set. Such a shunting operation introduces an apparent change in the ratio correction and phase angle. This change can be readily measured by the test set and from it the burden impedance calculated. It should be stressed that the addition of the shunting resistor does not significantly change the overall burden impedance. The change in the test set readings results from some of the secondary current being diverted from the test set and not from a change in the secondary current.

In the actual burden selection procedure, the burden resistance and inductance are first calculated. Once the proper ratios have been selected on the compensated current comparator and the test transformer is connected, an approximate value of resistance and inductance are selected on the burden box. The test current is then slowly increased to a value of about 10% or 20% of the rated value (0.5 or 1 A). The test set "ratio error" and "phase angle" controls are adjusted to bring the null detector to zero. At this point, the current of the test set is equal to the correction current of the test transformer. The test set digital panel meters will indicate the ratio error in ppm, and the phase angle in μrad. These readings are noted on the laboratory data sheet.

Next, the 1000-Ω precision resistor is placed directly across the secondary terminal of the test transformer, and a second balance is obtained by adjusting the test set controls. The new test set readings are recorded. The burden may be calculated from the following relationships:

$$R_B = (a_2 - a_1)R_A \times 10^{-6}, \tag{14}$$

and

$$L_B = (b_1 - b_2)(R_A/\omega) \times 10^{-6} \tag{15}$$

where

R_B is the burden resistance in ohms,

R_A is the value of the resistance connected directly to the secondary terminals of the test transformer in ohms, usually $R_A = 1000\ \Omega$,

L_B is the burden inductance in henries,

a_1 and a_2 are the ratio errors in ppm obtained in the first and second tests, respectively,

b_1 and b_2 are the phase angles in μrad obtained in the first and second tests, respectively, and

$\omega = 2\pi f$, where f is the signal frequency in hertz.

To further illustrate the procedure, consider the following example. With an unknown resistive-inductive burden, the test set readings at 60 Hz without R_A are: a_1 = 123 ppm, and b_1 = 315 μrad. With R_A = 1000 Ω connected to the secondary terminals, the readings become a_2 = 278 ppm, and b_2 = -73 μrad. Using eqs. (14) and (15), we obtain

$$R_B = (278 - 123) \times 10^{-6} \times 1000\,\Omega = 0.155\,\Omega, \tag{16}$$

$$L_B = (315 + 73) \times 10^{-6} \times 1000\,\Omega/377 = 1.029\,\text{mH}. \tag{17}$$

The proper burden is seldom achieved in the first setting. From the measurements indicated, the amount of resistance and inductance to be increased or decreased can readily be calculated. Incremental changes in the resistance and inductance are then made, and the measurement process is repeated. Usually after a few iterations, the proper value is obtained. The final value of the measured burden is recorded on the laboratory data sheet.

3.5 Current Ratio and Phase-Angle Data Collection

After the appropriate burden has been selected, the secondary current is set to a value of 0.5 A and the test set is adjusted for a null. The values of the ratio error and phase angle are recorded as indicated by the two digital displays on the test set. The current is then increased to 1 A and the process repeated. The remaining secondary currents of 2, 3, 4, and 5 A are set, balances obtained, and the data recorded. Figure 13 is an example of a typical laboratory data sheet.

After the first test run of secondary currents, the current is reduced again to 0.5 A and a balance obtained. The remaining currents are set and all data obtained a second time. The operator compares the values from the first run with those of the second run. The values should repeat to within about one-fifth of the measurement uncertainty. If agreement is not apparent, it may be an indication that the transformer is magnetizing because of a poor connection somewhere in the circuit, usually in the secondary current loop (including connections within the transformer). Significant heating of the transformer can sometimes cause the values to be unrepeatable.

If magnetization is occurring, the values for ratio error and phase angle will not repeat between the first and the second runs at the low value of current, but may agree at the higher values of current. Even after the transformer has been permitted to cool,

the offset in the data will be apparent. To verify this as the cause of disagreement, the transformer is again demagnetized and the test repeated. If the low-current data from both runs of the second set do not agree, it is probable that the circuit is magnetizing the transformer. In this case, the connections or leads must be cleaned, tightened, or replaced before repeating the test. If the lack of repeatability is caused by transformer heating, the data should once again repeat after a brief period of no-current flow to allow the transformer to cool.

For transformers having a window-type primary winding, tests are performed to determine the sensitivity to the position of the conductor (or conductors) passing through the window. The uncertainty assigned to the calibration results is adjusted to account for this positional sensitivity. To minimize any loss of accuracy in the calibration of the transformer and subsequent use, the primary link in the window is provided with suitable spacers which position and hold the conductor in a fixed window location. The transformer thus arranged can subsequently be used in the same configuration as calibrated, minimizing the effect of the position of the primary turn. The position of the primary return conductor may also affect the ratio error and phase angle, but it is usually less critical.

Once the data have been collected from one range and burden, the test is continued to the remaining burdens, ranges, and frequencies. The trends and transformer response are examined to determine if the results are representative for that type of transformer.

3.6 Summarization of the Measurement Results

After the data have been collected and reviewed for consistency, the results are entered into a spreadsheet program for analysis. Figure 14 shows a typical spreadsheet used for the summarization. The averages of the current ratio errors and the averages of the phase angles are determined, and the ratio correction factor (RCF) is calculated from the relationship

$$\mathrm{RCF} = 1 + \text{ratio correction}. \tag{18}$$

The scaling from units of ppm to ratio correction factor, and conversion of the phase angles from microradians to milliradians is done in the spreadsheet. Values of estimated measurement uncertainty at 50 and 60 Hz are also calculated using the following equations:

$$U_r = \pm[0.0075 + 0.0025(5/I_2)]\% \tag{19}$$

$$U_p = \pm[0.09 + 0.01(5/I_2)](1 + |\beta|/3)\,\mathrm{mrad} \tag{20}$$

C U R R E N T T R A N S F O R M E R C A L I B R A T I O N

TEST NUMBER: 722/ 123458
DATE:
CUSTOMER:

MAKER:
MODEL:
SERIAL NUMBER:
CURRENT RANGE: 10-1200 to 5 Amperes
RATED FREQUENCY: 25-500 Hertz
RATED BURDEN: 25 Volt-Amperes
DEMAG.: 31.6 VOLTS, 5 AMPS, 60 HERTZ

BURDEN CHECK

SPECIFIED			MEASURED	
DESIG	R	L μH	R	L
A	0.20	137	0.202	140 μH

FRQ	SECONDARY BR	AMP	NOM CUR	NOM RAT	CC RAT	RATIO PPM	ERROR PPM	DATA PPM	PHASE uRAD	ANGLE uRAD	DATA uRAD
60	A	0.5	10	2		-93	-91	-91	-548	-519	-520
		1				-93	-89	-89	-481	-454	-454
		2				-93	-93	-93	-397	-376	-376
		3				-97	-94	-95	-334	-321	-322
		4				-103	-103	-101	-284	-280	-281
		5				-109	-108	-109	-246	-246	-248
60	A	0.5	20	4		-100	-92	-93	-418	-443	-448
		5				-110	-109	-110	-206	-207	-207
60	A	0.5	50	10		-83	-82	-81	-436	-441	-440
		5				-103	-104	-104	-195	-195	-194
60	A	0.5	100	20		-84	-84	-84	-444	-439	-440
		5				-107	-106	-103	-193	-191	-201

Figure 13. Current Transformer Calibration Typical Data Sheet

CURRENT TRANSFORMER CALIBRATION

FRQ	SECONDARY BR	SECONDARY AMP	NOM CUR	NOM RAT	CC RAT	RATIO PPM	ERROR PPM	DATA PPM	PHASE uRAD	ANGLE uRAD	DATA uRAD
60	A	0.5	1200	240		-98	-90	-92	-541	-560	-559
		5				-88	-86	-90	-254	-256	-243
400	A	0.5	10	2		-171	-171	-171	-119	-118	-119
		5				-192	-192	-192	-85	-85	-85

Figure 13. Current Transformer Calibration Typical Data Sheet (Continued)

F R Q	B U R	R A T	SEC CUR	RATIO DATA	RATIO DATA	RATIO DATA	#	AVER	R C F	UNCER	PHASE DATA	PHASE DATA	PHASE DATA	AVER	PHASE	UNCER
60	A	2	0.5	-93	-91	-91	3	-91.7	0.99991	0.03250	-548	-519	-520	-529.0	0.5290	0.2235
			1	-93	-89	-89	3	-90.3	0.99991	0.02000	-481	-454	-454	-463.0	0.4630	0.1616
			2	-93	-93	-93	3	-93.0	0.99991	0.01375	-397	-376	-376	-383.0	0.3830	0.1297
			3	-97	-94	-95	3	-95.3	0.99990	0.01167	-334	-321	-322	-325.7	0.3257	0.1182
			4	-103	-103	-101	3	-102.3	0.99990	0.01062	-284	-280	-281	-281.7	0.2817	0.1121
			5	-109	-108	-109	3	-108.7	0.99989	0.01000	-246	-246	-248	-246.7	0.2467	0.1082
60	A	4	0.5	-100	-92	-93	3	-95.0	0.99991	0.03250	-418	-443	-448	-436.3	0.4363	0.2176
			5	-110	-109	-110	3	-109.7	0.99989	0.01000	-206	-207	-207	-206.7	0.2067	0.1069
									ERR	ERR				ERR		ERR
60	A	10	0.5	-83	-82	-81	3	-82.0	0.99992	0.03250	-436	-441	-440	-439.0	0.4390	0.2178
			5	-103	-104	-104	3	-103.7	0.99990	0.01000	-195	-195	-194	-194.7	0.1947	0.1065
60	A	20	0.5	-84	-84	-84	3	-84.0	0.99992	0.03250	-444	-439	-440	-441.0	0.4410	0.2179
			5	-107	-106	-103	3	-105.3	0.99989	0.01000	-193	-191	-201	-195.0	0.1950	0.1065
									ERR	ERR						
60	A	240	0.5	-98	-90	-92	3	-93.3	0.99991	0.03250	-541	-560	-559	-553.3	0.5533	0.2250
			5	-88	-86	-90	3	-88.0	0.99991	0.01000	-254	-256	-243	-251.0	0.2510	0.1084
								ERR								
400	A	2	0.5	-171	-171	-171	3	-171.0	0.9998	0.03250	-119	-118	-119	-118.7	0.1187	0.1975
			5	-192	-192	-192	3	-192.0	0.9998	0.01000	-85	-85	-85	-85.0	0.0850	0.1028

Figure 14. Current Transformer Calibration Spreadsheet for Calculation of Final Results

where

U_r is the estimated uncertainty in the value for the ratio correction factor

U_p is the estimated uncertainty in the value for the phase angle,

I_2 is the nominal value of secondary current, and

$|\beta|$ is the absolute value of the phase angle in mrad.

Care must be exercised in interpreting the uncertainty values by noting that U_r is a fraction of the ratio correction factor in percent while U_p is a direct phase-angle value. For example, the measured RCF of a transformer at 5 A is 1.000123 and the phase angle is 0.315 mrad. From eqs. (16) and (17), it is determined that $U_r = \pm 0.01$ % and $U_p = \pm 0.101$ mrad. Using these uncertainty values the probable upper and lower bounds for RCF are

$$1.000123(1 \pm 0.0001) = 1.000223 \quad \text{and} \quad 1.000023, \tag{21}$$

and for phase angle

$$0.315 \pm 0.101 = 0.416 \quad \text{and} \quad 0.214\,\text{mrad}. \tag{22}$$

The eqs (19) and (20) have been selected so that the limits of the uncertainty represent a realistic characterization of the transformer being calibrated over a range of secondary currents from 10% to 100% of the rated secondary current. The uncertainties will not usually be valid for currents above the rated current or for

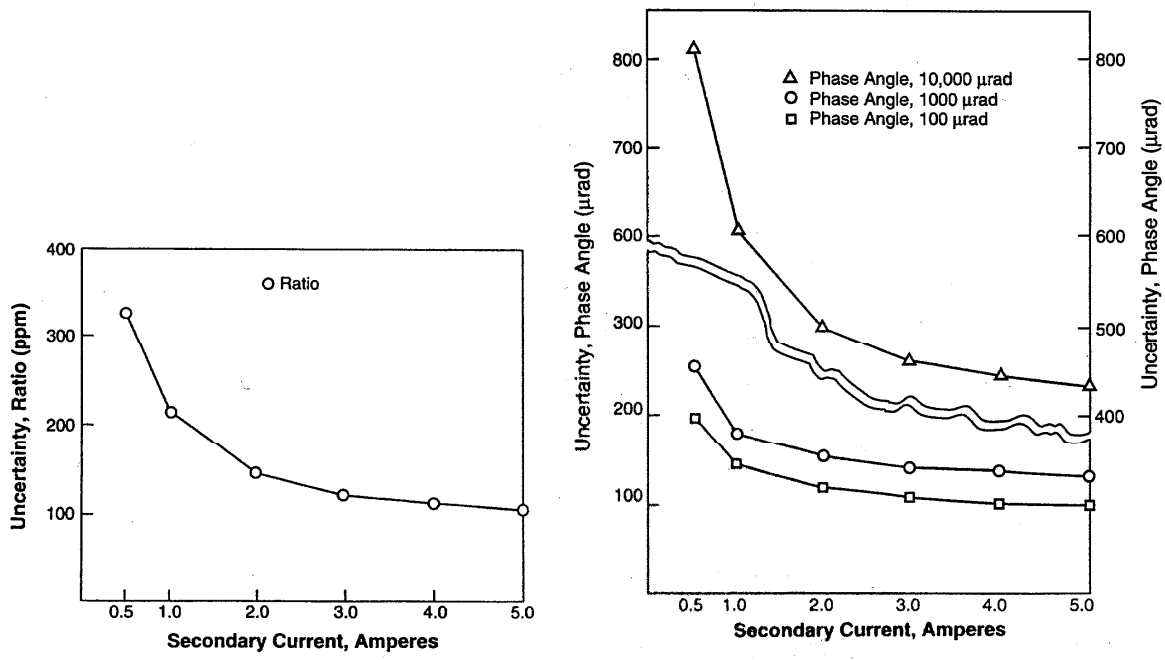

Figure 15. Ratio and Phase-Angle Uncertainty as a Function of Secondary Current

currents of less than 10% of rated current. For the ratio correction factor, the uncertainty at a secondary current of 5 A is ±0.01%, while at a secondary current of 1 A, the uncertainty doubles to ±0.02%. The uncertainty for the phase angle is not only a function of the secondary current, I_2, but also of the absolute value of the phase angle itself. For very small phase angles, the uncertainty is slightly greater than 0.1 mrad at 5 A and almost doubles to a value of 0.19 mrad at 0.5 A. Figure 15 shows plots of these functions. For the phase angle plot, the phase angle of zero is shown to represent the smallest possible uncertainty. The other values shown, 100 and 1000 μrad, are typical phase angles for which plots are also shown. It has been determined that these uncertainty formulas are adequate for nearly all of the calibrations performed. In the instances where it is apparent that the calculated uncertainties do not properly describe the characteristics of the current transformer, the formulas are suitably altered to describe the transformer's performance. This is discussed further in chapter 4. The formulas and values of uncertainty are stated on the Report of Calibration (or Report of Test).

			BURDEN		OCTOBER 1970		MARCH 1975		JULY 1980		FEBRUARY 1986	
FREQ	RAT	SEC CUR	R(ohm)	L(uH)	% COR'N	CUR RAT	% COR'N	CUR RAT	% COR'N	CUR RAT	% COR'N	CUR RAT
60	2	0.5	0.2	140	-0.009		-0.008		-0.010		-0.0090	0.99991
		1.0	0.2	140	-0.008		-0.008		-0.009		-0.0090	0.99991
		2.0	0.2	140	-0.008		-0.008		-0.009		-0.0090	0.99991
		3.0	0.2	140	-0.008		-0.009		-0.010		-0.0100	0.99990
		4.0			-0.008		-0.009		-0.010		-0.0100	0.99990
		5.0			-0.008		-0.010		-0.010		-0.0110	0.99989
60	4	5.0			-0.004		-0.010		-0.011		-0.0110	0.99989
60	10	5.0			-0.003		-0.009		-0.009		-0.0100	0.99990
60	20	5.0			-0.006		-0.010		-0.010		-0.0110	0.99989
60	240	5.0			0.001		-0.010		-0.008		-0.0090	0.99991
400	2	5.0			-0.02		-0.02		-0.020		-0.0200	0.9998

Figure 16. Historical Data of Transformer Calibration

3.7 Historical Data and Expected Performance

For high-quality current transformers, the values of the ratio correction factor and the phase angle change very little, if at all, over many years. This then makes the calibration history for a particular transformer very valuable. When a transformer has been previously calibrated at NIST, the previous data are compared to the present calibration results. Figure 16 shows a typical "history" sheet. Very close agreement, within two standard deviations, is expected if the transformer is tested under the same conditions (i.e., same burdens, frequency, ratios, currents, etc.). If the results do not agree with historical data, there is usually a problem in the transformer or the test arrangement. When no previous calibration history is available, the calibration results are compared to the expected performance for the type of transformer being calibrated. Occasionally, a transformer of unusual design and performance is encountered. This occurs when a transformer is heavily compensated, for example, and the results may appear different from the typical response. In such instances, the transformer manufacturer is usually consulted to verify that the observed response is representative for that particular design.

3.8 The Report of Calibration

For each current transformer that is tested, a Report of Calibration (or Report of Test) is issued. The Report gives the results of the measurements made by NIST on that particular current transformer under the test conditions specified at the time of test. An example of a Report of Calibration for a current transformer is shown in

figure 17. The Report of Calibration specifies the instrument that was calibrated, and includes the manufacturer, model or type, and serial number. If the transformer lacks a suitable unique serial number, NIST will mark and uniquely identify the transformer. The current ratios and frequency range are stated. The company which submitted the transformer for testing is clearly given by name and address.

Specific details of the test conditions are given, such as the current ratios, burden(s), frequency, and current, and other information such as laboratory temperature, special connections, or other pertinent conditions. Calibration results are given as ratio correction factors (RCF) and phase angle (in milliradians).

The estimated values of uncertainty are also given for both the ratio correction factors and for the phase angle. As discussed before and in chapter 4, allowances are made for both the systematic and random components of the measurement uncertainty. Values used for an individual calibration are available upon request.

The NIST test number and customer's order number are given. Questions regarding the test or inquiries regarding the Report of Calibration (or Report of Test) should be accompanied with the NIST test number, the instrument manufacturer, model, and serial number.

Reports of Calibration are issued for calibrations that are considered routine in that the specific device or others of its type have been calibrated previously at NIST. They are characterized by their secondary currents being in the range from 0.5 to 5 A, and the items under calibration are sufficiently stable to warrant uncertainty statements of about ± 100 ppm and $\pm 100\,\mu$rad.

The Reports of Test, on the other hand, are issued for special tests where the deviations from routine are significant. Special Tests may be performed to accommodate unusual operating characteristics and unusual accuracy requirements, e.g., to perform measurements beyond the determination of ratio correction and phase angle. Special Tests usually require additional experimental setups and additional investigation and are performed on an "at cost" basis.

U.S. DEPARTMENT OF COMMERCE
NATIONAL INSTITUTE OF STANDARDS AND TECHNOLOGY
(formerly NATIONAL BUREAU OF STANDARDS)
GAITHERSBURG, MD 20899

REPORT OF CALIBRATION

CURRENT TRANSFORMER
10-1200 to 5 Amperes, 25-500 Hertz, 25 Volt-Amperes
Knun-Betare Model 3121/C, Serial Number 1234

Submitted by

Peyew Public Gas & Electric Co.
100 Main Street
Sommeware, Ohio 45891

Frequency (hertz)	Secondary Burden	Secondary Current (amperes)	Current Ratio	Phase Angle (milliradian)
60	A	0.5	2 x 0.99991	+0.53
		1.0	0.99991	+0.46
		2.0	0.99991	+0.38
		3.0	0.99990	+0.33
		4.0	0.99990	+0.28
		5.0	0.99989	+0.25
60	A	5.0	4 x 0.99989	+0.21
60	A	5.0	10 x 0.99990	+0.19
60	A	5.0	20 x 0.99989	+0.20
60	A	5.0	240 x 0.99991	+0.25
400	A	5.0	20 x 0.9998	+0.1

Date of test: January 30, 1990
Temperature: 23°C

728/123456-90

Figure 17. Typical Report of Calibration

CURRENT TRANSFORMER
Knun-Betare Model 3121/C, Serial No. 1234
Peyew Public Gas & Electric Co.

- 2 -

Secondary burden A consisted of a resistance of 0.20 ohm in series with an inductance of 140 microhenries.

At a frequency of 60 hertz, the uncertainty for the values of ratio does not exceed $\pm[0.0075 + 0.0025(5/I_s)]$ percent, and for the values of phase angle does not exceed $\pm[0.09 + 0.01(5/I_s)]\cdot(1 + |\beta|/3)$ milliradians, where I_s is the secondary current in amperes and β is the reported value of phase angle in milliradians. At a frequency of 400 hertz, the uncertainty for the value of ratio does not exceed $\pm 2\cdot[0.0075 + 0.0025(5/I_s)]$ percent, and for the value of phase angle does not exceed $\pm 3\cdot[0.09 + 0.01(5/I_s)]\cdot(1 + |\beta|/3)$ milliradians. These figures include allowances (available on request) for both the random and the systematic errors of the calibration process.

For the Director,
National Institute of Standards and Technology

Kalie Braetour, Group Leader
Applied Electrical Measurements
Electricity Division

Test No. 728/123456-90
Purchase Order No. 8-00331/A
Date: January 30, 1990

Figure 17. Typical Report of Calibration (Continued)

4 MEASUREMENT UNCERTAINTY ANALYSIS

4.1 General Considerations

Several considerations are important in preparing the uncertainty estimates for the calibration of current transformers. The total measurement uncertainty arises from both (1) the NIST standards and test equipment and (2) the device under test. The former source of error is well characterized; the latter, usually being the dominant one, may not be. In addition, many transformers submitted to NIST for calibration are built for special purposes and have unique characteristics. Even for the widely used transformers, the accuracy of each unit is strongly affected by the conditions under which it is used and calibrated, that is: the nominal ratio, the value of the burden, the magnitude of the current, and the electromagnetic environment. To achieve the maximum accuracy, many transformers and even test points would have to be evaluated separately rendering the process prohibitively expensive and uneconomical for the customers. An approach has been taken to develop an error budget that includes most of the transformers. For exceptionally stable transformers, higher accuracies are possible under Special Test provisions and additional cost. Accuracies might be lowered for transformers whose stabilities are inferior.

4.2 Accuracy Evaluation of NIST Standards and Equipment

4.2.1 Current Comparators

The customers' transformers are calibrated at NIST on a relative basis against current comparators that are designed and built to have negligible corrections when used for routine calibrations. To achieve this, the current comparators themselves must be calibrated on a more fundamental or "absolute" basis. Complete "absolute" calibration is an involved and lengthy undertaking for a multi-range current comparator. Often the limits of errors of a current comparator can be determined by indirect means. Both approaches have been used at NIST. For example, as the current comparators were constructed, indirect evaluations and tests were used. Later, all finished devices were calibrated on a fundamental basis at several nominal ratios to ensure that the indirect approaches are valid and that the corrections are negligible, as planned. Table 5 shows estimates of systematic uncertainties for three of the NIST compensated current comparators and the test set.

Table 5. *Systematic Uncertainties in NIST Equipment*

α = ratio error, in ppm, and β = phase angle in μrad, both of which are test-set readings.

SOURCE OF UNCERTAINTIES	Ratio (ppm)	Phase Angle (μrad)
Low-Range CCC*	±8	±8
Mid-Range CCC		
Primary feed	±3	±3
Secondary feed	±8	±8
High-Range CCC	±5	±5
Test Set	$\pm(1+0.005\|\alpha\|)$	$\pm(1+0.005\|\beta\|)$

*CCC–Compensated Current Comparator

The fundamental measurement of transformer ratios at NIST relies on a build-up ("bootstrap") technique whereby two transformers or current comparators with known ratios are used to calibrate a third one [5] [7]. The starting point is a 1:1 current comparator that can be self-calibrated by connecting the primary and secondary windings in series. Two calibrated 1:1 current comparators are then used to calibrate a 2:1 current comparator.

The secondary windings of all three are connected in series. The primary currents of the two 1:1 current comparators are added and applied to the primary winding of the 2:1 current comparator. The new ratio is the sum of the two previously known ratios. The process can be continued for higher ratios. Three identical multi-range current comparators are required. In the literature the approach has been called the m + n technique since the new ratio is the sum of the two previous ones, m + n [5].

Another bootstrap technique, in which the new ratio is the product of two previously known ratios (m × n technique), is also utilized at NIST [8]. Two multi-range current comparators or current transformers are used, plus a small current comparator for comparing two unequal secondary currents in the ratio of 2:1 and 2.5:1. The primary windings of the full-range current comparators are connected in series while the secondary windings are connected to the small current comparator. For example, a 240:1 ratio can be calibrated with known 120:1 and 2:1 ratios.

Two amplifier-aided current transformers were calibrated by the m × n method. These, in turn, were used to check at least a few ratios on each of the three current comparators used for routine calibrations.

The build-up calibration process requires a large amount of time and equipment. Also the uncertainties tend to accumulate with every step and may lead to unrealistically high values at large ratios. Nevertheless, it is a rigorous approach and therefore

a highly desirable means for checking other approaches, including the indirect techniques discussed in the following paragraphs. Fortunately, the problem is mitigated by the fact that current comparators and similar devices have permanently stable ratios. Usually a minimum number of transformers are then calibrated on a fundamental basis and others calibrated on a relative basis.

There are two types of intrinsic errors in current comparators: leakage flux causing magnetic errors, and internal capacitances causing capacitive errors. Both types of errors are well understood and can be controlled by the design of the current comparator. The limits of both can be estimated from indirect measurements.

With respect to the magnetic error, the worst-case leakage flux can be simulated and its effects measured. For example, two concentrated ratio windings with the same number of turns can be placed at the diametrically opposite parts of the core. Alternatively, one of the windings can be distributed along the core, the other concentrated. Both configurations will result in large leakage flux. The two windings are connected in series opposition and the device is calibrated on a fundamental basis as a 1:1 current comparator. The number of turns in the windings can be small to minimize the capacitive error. The test is performed with the worst-case and realistic geometries of the ratio windings. Under all conditions, the magnetic error should be insignificant for a well-designed current comparator.

Current comparators wound on toroidal cores are particularly sensitive to the leakage fields with certain geometries, for example, when the magnetic field is radial with respect to the toroid. External current loops can be used to simulate such fields.

High-permeability toroidal cores inherently minimize the relative magnitude of the leakage flux. Further reduction is achieved by placing a magnetic shield between the ratio and detection windings. The magnetic shield tends to short circuit the leakage flux, thus preventing its entry into the toroidal core and the detection winding. The aim is to provide sufficient magnetic shielding so that the error is negligible even in adverse winding configurations.

Different types of magnetic shields, their effectiveness and the errors resulting from the leakage flux have been thoroughly investigated in a current comparator designed for an impedance bridge [9]. The worst-case error for an unshielded current comparator can be several tens of ppm. Yet a simple judiciously designed shield made of high-permeability material will reduce the error to a sub-ppm level. A multi-layer, high-performance shield reduces the error below a part in 10^8.

The capacitive errors are caused by the turn-to-turn capacitances in the same ratio winding, by the winding-to-ground capacitances, and by the winding-to-winding capacitances. The latter are eliminated by electro-static shields, but the former two may be dealt with as follows.

The turn-to-turn and winding-to-ground capacitances tend to divert some of the

current from passing through all of the turns in a winding. They effectively produce a capacitive shunt across the ratio windings. In the primary winding, the number of turns in many cases is below 100 with negligibly small internal capacitances. The secondary windings in mid- and high-range current comparators have significant internal capacitances that could cause possible errors if there were voltage across these windings. However, when operated with the primary feed, there is a very small voltage across the secondary windings and, hence, negligible capacitive error. This is not so when the secondary feed is used and up to 200 volts can be introduced in the secondary winding producing capacitive error of the order of 10 ppm. The capacitive error is partly compensated by the external capacitor, C_c, in figure 8.

The low-range current comparators with a nominal ratio of less than unity present a special problem. The voltage in the primary winding is high regardless of whether primary or secondary feed is used when the device is operated as a compensated current comparator. The auxiliary current transformer in figure 10 removes the need of the compensated current comparator to serve as a power transformer and thus reduces the voltage across the windings. As a result, the capacitive error can be greatly reduced.

4.2.2 Test Set

The test set is a minor contributor to uncertainties. Because of the added circuitry it could act as a receiver of electromagnetic interference. The circuit that generates the correction current has accuracy limitations. The test set has a fixed uncertainty component of ± 1 ppm and ± 1 μrad, and another uncertainty component that depends on the magnitude of the injected current. The latter is $\pm 0.5\%$ of the ratio correction and $\pm 0.5\%$ of the measured phase angle. Expressed algebraically the uncertainties become $\pm(1 + 0.005|\alpha|)$ ppm for the ratio correction, and $\pm(1 + 0.005|\beta|)$ μrad for the phase angle, where α and β are the test set readings.

4.3 Errors Originating in Transformers Being Tested

The ratio in good instrument transformers does not have drift over time. However, short- and long-term fluctuations are observed in the measured ratio correction and phase angle. These can be treated as random errors if adequate time and resources are available to obtain sufficient data. This is possible with some transformer types that are submitted to NIST often, but not with others that are one-of-a-kind or are calibrated infrequently.

The observed instabilities in transformers have well-known physical bases, such as magnetization, heating effects, burden sensitivity, and winding geometry. The limits of variations due to the above causes can be estimated from the properties

Table 6. Estimated Possible Instabilities in a Typical Transformer Under Test

SOURCE	Ratio Correction (ppm)	Phase Angle (μrad)
1. Core magnetization	±5 to ±15	±16 to ±48
2. Uncertainty in burden	±6	±19
3. Transformer temperature	±6	±19
4. Current value	±3	±9
5. Primary winding position	±20	±6
6. Electromagnetic interference	±10	±10

of the device or can be determined from auxiliary tests. From a knowledge of the transformers and the results of past tests, a list of errors, table 6, has been prepared.

The estimated values in table 6 represent the limits of variations originating from the indicated sources. The equivalent circuit of figure 2b and eq. (2) are useful for estimating the source of error. It should be emphasized that the values in table 6 are approximations for typical transformers submitted to NIST for calibration. More stable transformers, e.g., two-stage types, are available in which instabilities are lower by one or two orders of magnitude. Less stable transformers have also been encountered by NIST. In both cases the stability and quality of the device usually becomes apparent soon after the tests have been started.

For estimating the values in table 6, Z_m has been assumed to be 1000 Ω, the series inductive reactance being three times larger than the equivalent loss resistance. Thus, $X_m = 949\,\Omega$ and $R_m = 316\,\Omega$. The secondary leakage impedance is assumed to be resistive with a value of $R_2 = 0.5\,\Omega$. Similarly, the burden impedance is assumed to be resistive with $R_B = 0.5\,\Omega$.

1. The most serious source of error in current transformers is residual magnetization of the core. Even if steps are taken to minimize it, some residual magnetization will be generated by switching transients and small direct currents in the circuit caused by rectification in oxidized connections or by thermal electromotive forces. Magnetization reduces the effective permeability of the core and thus the magnetizing impedance. A range of instabilities is given for this effect. The estimated minimum effect is ±3% variation in the magnetizing impedance which is achievable under laboratory conditions following demagnetization of the core. The estimated maximum variation in Z_m is ±10%, a value that could be expected after a period of use without demagnetization.

2, 3. The burden uncertainty arises from the accuracy to which the burden can be set and then maintained due to temperature changes. A 2% allowance is made for the initial setting of the burden and 2% for the heating effects. The changes

in the burden directly affect the indicated ratio corrections and phase angles by changing the ratio R_B/Z_m (see figure 2). In the absence of the external burden, temperature changes affect the ratio Z_2/Z_m. A 4% uncertainty is assumed due to ambient temperature and self-heating effects in R_2/Z_m.

4. The nonlinearity of the core causes changes in Z_m with current, especially at low permeabilities and currents. It is assumed that Z_m changes by 10% between the secondary currents of 0.25 and 0.75 A. If in the calibration the 0.5-A value can be maintained within ±0.1 A, the uncertainty from this source will be ±3 ppm and ±9 μrad. Note that the previously discussed sources of error produce larger effects in the phase angle and are related to the variations in $(Z_2 + Z_B)/Z_m$.

5. In the window-type transformers, an uncertainty is caused by the position of the conductor in the window. The geometry of the primary winding affects both the primary and the secondary leakage inductance, thus causing an uncertainty in the ratio correction and, to a lesser extent, in the phase angle. The estimated values in table 6 are based on previous observations.

6. Finally, the electromagnetic interference from the supply transformer, the power lines in the building, and ground currents can also cause measurement errors.

The estimated instabilities tabulated in table 6 will lead to a lack of repeatability or long-term random error as the transformer is recalibrated. It is instructive to compare such predicted lack of repeatability with actual performance of a transformer with similar electrical characteristics. Such a comparison was made using a current transformer that had been calibrated 15 times over a 55-month period. The calibration data are shown in table 7, with the standard deviation of 14 ppm for the ratio correction and of 25 μrad for the phase angle.

The estimated errors of table 6 are combined as if they were true, independent random errors. A uniform distribution is assumed for each of them. For a uniform distribution

$$s = \frac{d}{\sqrt{3}} \tag{23}$$

where s is the standard deviation, and d is the maximum value of the estimated error.

The combined standard deviation is the square root of the sum of the squares of the individual standard deviations. It is calculated for the values of table 6 using the mean value of the magnetization effect (±10.5 ppm, ±32 μrad). Such a calculation yields 15.2 ppm for the ratio correction and 25.6 μrad for phase angle.

The transformer whose calibration data are shown in table 7 has a fixed primary winding and it was calibrated without an external burden and at relatively high secondary current, thus, the items 2, 4, and 5 of table 6 do not apply. Calculating

Table 7. Calibration History of a Typical Laboratory Grade Current Transformer, Marked Ratio 10 A:5 A.

Mean values and standard deviations are the cumulative values to and including the date of calibration.

Date	RATIO CORRECTION (ppm)			PHASE ANGLE (μrad)		
	Measured Value	Mean	Std Dev.	Measured Value	Mean	Std. Dev.
16 Nov 81	125	—	—	453	—	—
20 Jan 82	156	140.5	21.9	470	461.5	12.0
22 Feb 82	130	137.0	16.6	434	452.3	18.0
23 Feb 82	131	135.5	13.9	439	449.0	16.1
11 Mar 82	145	137.4	12.8	403	439.8	24.9
17 Jan 83	161	141.3	14.9	437	439.3	22.3
27 Apr 83	148	142.3	13.9	495	447.2	29.3
30 Sep 83	128	140.5	13.8	451	447.7	27.1
27 Oct 83	120	138.2	14.6	444	447.3	25.4
2 Feb 84	141	138.5	13.8	466	449.2	24.7
3 Jul 84	120	136.8	14.2	442	448.5	23.5
27 Sep 84	163	139.0	15.5	484	451.5	24.6
17 Sep 85	142	139.2	14.9	487	454.2	25.6
7 Jan 86	141	139.4	14.3	488	456.6	26.2
17 Jun 86	144	139.7	13.8	459	456.8	25.2

the standard deviation for the remaining items yields 9.1 ppm for the ratio correction and 22.2 μrad for the phase angle. The calculated standard deviations from the estimated error components are in reasonable agreement with the actually observed long-term standard deviation of the transformer indicating that the instabilities of a transformer can be predicted from its characteristics.

4.4 Overall Measurement Uncertainties

In estimating the overall uncertainty, the random and systematic uncertainty components are combined using the guidelines of the BIPM Committee [10]. The two components are combined on a root-sum-squared basis at the three sigma level. A uniform distribution is assumed for systematic uncertainties:

$$U = (9s^2 + 3d^2)^{\frac{1}{2}}, \tag{24}$$

where U is the overall uncertainty, s is the long-term standard deviation, and d is the systematic uncertainty of NIST equipment.

In the absence of sufficient data to determine long-term standard deviation, it

is estimated from the type of information in table 6 computed for the specific transformer.

Consider an example. The mid-range compensated current comparator is used with the test set having the total systematic uncertainty of 6 ppm and 10 μrad. Using the cumulative standard deviations from table 7 (June 1986 values), we obtain

$$U_r = 43.3\,\text{ppm}, \tag{25}$$

$$U_p = 77.0\,\mu\text{rad} \tag{26}$$

as the uncertainties in ratio correction and phase angle.

Consider another example where the long-term standard deviation is not available, but instead the combined uncertainties from table 6 are used (15.2 ppm and 25.6 μrad). The overall uncertainties become

$$U_r = [(3 \times 15.2)^2 + (\sqrt{3} \times 6)^2]^{\frac{1}{2}} = 46.7\,\text{ppm, and} \tag{27}$$

$$U_p[(3 \times 25.6)^2 + (\sqrt{3} \times 10)^2]^{\frac{1}{2}} = 78.7\,\mu\text{rad.} \tag{28}$$

For this type of transformer the uncertainties quoted in NIST reports are ± 100 ppm and $\pm 100\,\mu$rad. In both cases the quoted uncertainty for ratio correction is somewhat larger then the observed value, while the phase angle uncertainty is about the same magnitude as the observed value. There is a certain advantage to keeping accuracy statements simple and as inclusive as possible. Hence, the rounded off figure of 100 ppm (or μrad) is used for both error components.

4.5 Special High-Accuracy Transformers

The discussion in this chapter so far has dealt with the transformers that constitute the majority of the NIST calibration workload. These are relatively old designs having corrections within 0.1% and 1 mrad and stabilities about an order of magnitude better. Advances in technology enable the construction of simple, two-winding transformers that are about an order of magnitude more accurate. Two-stage transformers can be constructed that have corrections and instabilities within a few ppm (or μrad). The sources of error as listed in table 6 are greatly reduced or even eliminated. The accuracy of these specialized transformers is comparable to that of NIST standards.

Calibration of high-accuracy ratio devices on a Special Test basis is provided. The charges are based on the actual cost rather than a fixed fee. Special Tests are subject to constraints due to scheduling and availability of equipment. The accuracies for such tests are evaluated on an individual basis. Uncertainties in the range of ± 5 to 10 ppm (or μrad) are possible.

4.6 International Comparisons

When a laboratory, such as NIST, attempts to verify the accuracy of its current ratio standards, a vast amount of time and effort is required. One has to be always cautious in guarding against undetected errors. Inasmuch as possible, redundant techniques are employed to reduce the possibility of undetected errors. Interlaboratory comparisons among the national standards laboratories of other countries provide excellent means for checking the highest accuracy measurements. Two international comparisons have been conducted over the past 25 years in which NIST directly participated.

In 1965 a comparison was conducted between NIST and the National Research Council (NRC), Canada. Two multirange, audio-frequency current transformers were used [11]. The nominal ratios ranged from 1:1 to 6:1. The tests were conducted between 400 Hz and 10 kHz. At the frequencies of the primary interest, 400 and 1000 Hz, the agreement was within 0.4 ppm and 5.4 μrad at 400 Hz, and 0.3 ppm and 6.1 μrad at 1000 Hz. The greater than expected phase angle difference at 400 Hz was attributed to the magnetization of the core.

During 1984–1985, NIST, NRC, and three European laboratories participated in calibrating a multi-range, power frequency transformer at 50 and 60 Hz [13]. A range of current ratios from 5:1 to 200:1 was checked. The secondary currents ranged from 200% of rated to 1% of rated. At the rated current the agreement of all participants was within 1 ppm and 1.9 μrad. At very low currents, 1% of rated, the spread was 3 ppm and 5 μrad. The spread at low currents was partly attributed to the electromagnetic pickup in the transformer under test.

The above direct interlaboratory comparisons and others that have been indirect (e.g., NRC with European laboratories) confirm that the state of the art is well within the 100 ppm/100 μrad uncertainty which is used by NIST in routine work. At the 5 ppm/5 μrad level there are differences. Such uncertainties are given by NIST only in special cases in which there is ample evidence through independent checks that the data are valid. Also the transformer under test must exhibit adequate stability.

5 ACKNOWLEDGMENTS

The authors would like to express their appreciation to the following staff members: Mr. T. M. Souders who, on many occasions, guided and consulted in matters regarding current transformers, Mrs. E. A. Matthews and Mr. Robert Palm who prepared portions of the graphical data, and Mrs. R. Cummings, Mrs. D. Williams, Mrs. B. Meiselman, Mrs. R. Von Feldt, and Mr. J. Greenberg who helped prepare the manuscript.

6 APPENDIX

INFORMATION REGARDING
THE NIST CALIBRATION SERVICE FOR
INSTRUMENT CURRENT TRANSFORMERS

A1 Technical Information

Only metering-type or laboratory-standard current transformers (including current comparators) will be accepted for test. These tests determine the current ratio correction factor and phase angle of the transformer "as received." NIST does not undertake the cleaning of transformers and does not knowingly begin tests on faulty transformers.

Before a test can be started, the test conditions must be completely specified by the user. The current ratio (primary to secondary) available on a routine basis ranges from 0.25:5 to 12 000:5. Tables 1 to 3 in the body of this document give specific ratios that are routinely available. Ratios other than those listed may be available by special arrangements at an additional fee. Normal secondary current levels for testing are 0.5, 1, 2, 3, 4, and 5 A. Over-current tests, up to but not exceeding 10 A, are generally available within the limitations of NIST equipment. Burdens should be specified either as:

1. Series resistance in ohms and inductance in milliheneries,
2. ANSI/IEEE C57.13–1978 standard burdens,
3. VA load at specified power factor, or
4. The user supplied burden and connecting leads.

Normal test frequencies are 50, 60, and 400 Hz. Other frequencies may be available and inquiries should be made regarding special tests.

Uncertainties of the measurement are stated on the Report of Calibration (or Report of Test) which is issued for each instrument calibrated.

A2 Calibration Request, Transformer Shipping, Insurance and Risk of Loss

A formal purchase order for the calibration or test should be sent before or at the time the transformer is shipped. This should provide clear identification of the apparatus being submitted and give separate instructions for the return shipment, mailing of the report, and billing. To minimize the time during which equipment is out of service, arrangements can be made to delay shipment to NIST until shortly before the test is scheduled to begin.

Requests for calibrations or tests from Federal and state agencies, must be accompanied either by a purchase order, or by a letter or other document authorizing the costs to be billed to the agency. The NIST agreement to perform the calibration does not imply acceptance of any provisions set forth in the order contrary to the policy, practice, or regulations of the NIST or the U. S. Government. The purchase order should clearly state the desired test conditions.

NIST staff will provide assistance for individual measurement problems where they can. The NIST headquarters is located in Gaithersburg, Maryland, approximately 25 miles northwest of Washington, D. C. The calibration of instrument transformers is performed at the Gaithersburg site by the Electricity Division (811) of the Electronics and Electrical Engineering Laboratory of NIST. Inquiries may be made by direct correspondence to:

National Institute of Standards and Technology
Electricity Division (811)
Metrology Building, Room B344
Gaithersburg, MD 20899

The reader is encouraged to obtain a copy of the NIST Special Publication 250, Calibration and Related Measurements Services of the National Institute of Standards and Technology. This publication is available from the following sources:

Superintendent of Documents
Government Printing Office
Washington, DC 20402

National Institute of Standards and Technology
Office of Physical Measurement Services
Physics Building, Room B354
Gaithersburg, MD 20899

National Institute of Standards and Technology
Publications and Program Inquiries Office
Administration Building, Room E128
Gaithersburg, MD 20899

The appendix of SP 250 listing current services and fees is issued twice yearly (usually in June and December) and is available at no charge from the above sources.

Scheduled work assignments for calibrations and other tests generally will be made in the order in which confirmed requests are received. However, work for U.S. Government agencies may be given priority. For the regular services, the workload is usually such that the turnaround interval, between the date a customer's apparatus is received and the date it is prepared for return shipment, will not be more than 45 days. Some types of instruments may require a longer calibration time, particularly if their abnormal behavior requires reruns to check reliability. The customer who

can spare his instrument for only a short time usually can arrange shipment of his instrument to NIST in time to meet the scheduled start of calibration. Generally, the acknowledgment of the purchase order gives the expected completion date.

NIST staff does not undertake repair services. Therefore, all apparatus submitted for calibration should be free of defects and in proper working order. Electrical contacts should be in proper condition both mechanically and electrically.

A report is issued upon the calibration of each current transformer. This report contains the measured values of the transformer and their uncertainties. Reports of Calibration for current transformers are discussed in section 3.8 of the body of this document and an example of a typical report is given.

NIST neither requires nor recommends intervals between NIST calibrations for current transformers. These calibration intervals depend upon the performance of the individual standard and the accuracy requirements of its application. These must both be determined by the user. Some state utility commissions have established calibration intervals determined to be necessary for such instruments.

Shipment of apparatus to NIST for calibration or other test should be made only after the customer has accepted the estimate of cost and the tentative scheduling. Apparatus not in good condition will not be calibrated. If defects are found after calibration has begun, the effort may be terminated and data will be issued summarizing information collected to that point. A fee may be charged in accordance with the amount of work done.

The customer should carefully pack apparatus sent to NIST to minimize the likelihood of damage in shipping and handling. In every case, the sender should consider the nature of the apparatus, pack it accordingly, and clearly label shipments containing fragile instruments or materials. Care should be taken in selecting the best mode of transportation.

To minimize damage during shipment resulting from inadequate packing, the use of strong, reusable containers is recommended. As an aid in preventing loss of such containers, the customer's name should be legibly and permanently marked on the outside. In order to prolong the container's use, the notation REUSABLE CONTAINER, DO NOT DESTROY should be marked on the outside.

Shipping and insurance coverage instructions should be clearly and legibly shown on the purchase order. The customer must pay shipping charges to and from NIST; shipments from NIST will be made collect. The method of return transportation should be stated and it is recommended that return shipments be insured, since NIST will not assume liability for their loss or damage. For long-distance shipping it is found that air freight provides an advantage in reduction of time in transit. If return shipment by parcel post is requested or is a suitable mode of transportation, shipments will be prepaid by NIST, but without insurance coverage. When no

shipping or insurance instructions are furnished, return shipment will be made by common carrier collect and uninsured.

Shipments of transformers to NIST for calibration should be directed to:

National Institute of Standards and Technology
Electricity Division, MET B165
Rt. I-270 and Quince Orchard Road
Gaithersburg, MD 20899

7. REFERENCES

[1] J. D. Ramboz and R. C. McAuliff, "A Calibration Service for Wattmeters and Watthour Meters," Natl. Bur. Stands. (U.S.), Tech. Note 1179, July 1983.

[2] W. E. Anderson, "A Calibration Service for Voltage Transformers and High-Voltage Capacitors," Natl. Bur. Stands. (U.S.), Spec. Publ. 250–33, June 1988.

[3] J. D. Simmons, Ed., "NIST Calibration Services–Users Guide," Natl. Inst. Stands. and Technol., Spec. Publ. 250, 1989.

[4] American National Standard Requirements for Instrument Transformers, Am. Natl. Stands. Instit., (ANSI/IEEE) C57.13-1978 (reaffirmed, 1986), New York.

[5] W. J. M. Moore and P. N. Miljanic, "The Current Comparator," Peter Peregrinus Ltd., London, 1988. [IEE Electrical Measurement Series; 4].

[6] R. L. Kahler, "An Electronic Ratio Error Set for Current Transformer Calibration," IEEE Trans. Instrum. Meas., Vol. IM-28, No. 2, June 1979.

[7] N. L. Kusters and W. J. M. Moore, "The Development and Performance of Current Comparators for Audio Frequencies," IEEE Trans. Instrum. Meas., Vol. IM-14, No. 4, Dec. 1965.

[8] T. M. Souders, "Wide-Band Two-Stage Current Transformers of High Accuracy," IEEE Trans. Instrum. Meas., Vol. IM-21, No. 4, Nov. 1972.

[9] O. Petersons and W. E. Anderson, "A Wide-Range High-Voltage Capacitance Bridge with One PPM Accuracy," IEEE Trans. Instrum. Meas., Vol. IM-24, No. 4, Dec. 1975.

[10] Bureau International des Poids et Mesures (BIPM) Working Group on the Statement of Uncertainties; Metrologia, Vol. 17, No. 2, p. 73, 1981.

[11] B. L. Dunfee and W. J. M. Moore, "An International Comparison of Current-Ratio Standards at Audio Frequencies," IEEE Trans. Instrum. Meas., Vol. IM-14, No. 4, Dec. 1965.

[12] A. Braun, H. Danneberg, and W. J. M. Moore, "An International Comparison of 50–60 Hz. Current-Ratio Standards at Currents Up to 60,000 A," IEEE Trans. Instrum. Meas., Vol. IM-27, No. 4, Dec. 1978.

[13] W. Schwitz, R. Kampfer, A. Braun, T. M. Souders, W. J. M. Moore, B. R. Cassidy, and T. A. Decon, "International Comparison of Current Transformer Calibrations," IEEE Trans. Instrum. Meas., Vol. IM-34, No. 2, June 1985.

* U.S. G.P.O.:1991-281-557:40033

NIST-114A
(REV. 3-90)

U.S. DEPARTMENT OF COMMERCE
NATIONAL INSTITUTE OF STANDARDS AND TECHNOLOGY

BIBLIOGRAPHIC DATA SHEET

1. PUBLICATION OR REPORT NUMBER
NIST/SP-250/36

2. PERFORMING ORGANIZATION REPORT NUMBER

3. PUBLICATION DATE
June 1991

4. TITLE AND SUBTITLE

A Calibration Service for Current Transformers

5. AUTHOR(S)

John D. Ramboz and Oskars Petersons

6. PERFORMING ORGANIZATION (IF JOINT OR OTHER THAN NIST, SEE INSTRUCTIONS)

U.S. DEPARTMENT OF COMMERCE
NATIONAL INSTITUTE OF STANDARDS AND TECHNOLOGY
GAITHERSBURG, MD 20899

7. CONTRACT/GRANT NUMBER

8. TYPE OF REPORT AND PERIOD COVERED
Final

9. SPONSORING ORGANIZATION NAME AND COMPLETE ADDRESS (STREET, CITY, STATE, ZIP)

Same as item #6 above.

10. SUPPLEMENTARY NOTES

11. ABSTRACT (A 200-WORD OR LESS FACTUAL SUMMARY OF MOST SIGNIFICANT INFORMATION. IF DOCUMENT INCLUDES A SIGNIFICANT BIBLIOGRAPHY OR LITERATURE SURVEY, MENTION IT HERE.)

A calibration service at the National Institute of Standards and Technology (NIST) for laboratory-quality current transformers is described. The service provides measurements of the current ratio and the phase angle between the secondary and primary currents. In the Report of Calibration or Test, the measured ratio is reported as the product of the marked (nominal) ratio and the ratio correction factor. The measured phase angle is reported directly in milliradians (mrad) and is positive if the secondary current leads the primary. The range of primary-to-secondary current ratios that can be measured with the equipment at NIST extends from 0.25 A:5 A to 12 000 A:5 A. The maximum current at the present time is about 20 000 A. Estimates of calibration uncertainties, including their sources, are given and quality control procedures are described. For routine calibrations, uncertainties of ±0.01% for the ratio and ±0.1 mrad for the phase angle are quoted. However, lower uncertainties—to ±0.0005% or 5 parts per million (ppm) for ratio and ±0.005 mrad or 5 μrads for phase angle—are possible under the provisions of Special Tests.

12. KEY WORDS (6 TO 12 ENTRIES; ALPHABETICAL ORDER; CAPITALIZE ONLY PROPER NAMES; AND SEPARATE KEY WORDS BY SEMICOLONS)

calibration; current transformers; electric power; electric standards; NIST calibration service

13. AVAILABILITY

X	UNLIMITED
	FOR OFFICIAL DISTRIBUTION. DO NOT RELEASE TO NATIONAL TECHNICAL INFORMATION SERVICE (NTIS).
X	ORDER FROM SUPERINTENDENT OF DOCUMENTS, U.S. GOVERNMENT PRINTING OFFICE, WASHINGTON, DC 20402.
X	ORDER FROM NATIONAL TECHNICAL INFORMATION SERVICE (NTIS), SPRINGFIELD, VA 22161.

14. NUMBER OF PRINTED PAGES
60

15. PRICE

ELECTRONIC FORM

THE SP 250 SERIES ON NIST MEASUREMENT SERVICES*

SP 250–1 Spectral Radiance Calibrations
PB87179883

SP 250–2 Far Ultraviolet Detector Standards
PB87227609

SP 250–3 Radiometric Standards in the Vacuum Ultraviolet
PB87227625

SP 250–4 Fricke Dosimetry in High-Energy Electron Beams
PB88110374

SP 250–5 Alpha-Particle Calibrations
PB88168620

SP 250–6 Regular Spectral Transmittance
PB88108550

SP 250–7 Radiance Temperature Calibrations
PB88123674

SP 250–8 Spectral Reflectance
PB88109905

SP 250–9 Calibration of Beta-Particle-Emitting Ophthalmic Applicators
PB88108535

SP 250–10 Radioactivity Calibrations with the "4π" Gamma Ionization Chamber and Other Radioactivity Calibration Capabilities
PB88123708

SP 250–11 Dosimetry for High Dose Applications
PB88201587

SP 250–12 Neutron Personnel Dosimetry
PB87227617

SP 250–13 Activation Foil Irradiation with Californium Fission Sources
PB88217443

SP 250–14 Activation Foil Irradiation by Reactor Cavity Fission Sources
PB88217435

SP 250–15 Photometric Calibrations
PB88153747

SP 250–16 Calibration of X-Ray and Gamma-Ray Measuring Instruments
PB88211826

SP 250–17 The NBS Photodetector Spectral Response Calibration Transfer Program
PB88201595

SP 250–18 Neutron Source Strength Calibrations
PB88211818

SP 250–19 Calibration of Gamma-Ray-Emitting Brachytherapy Sources
PB89193858

SP 250–20 Spectral Irradiance Calibrations
PB88123781

SP 250–21 Calibration of Beta-Particle Radiation Instrumentation
PB88201579

SP 250–22 Platinum Resistance Thermometer Calibrations
PB88138367

SP 250–23 Liquid-in-Glass Thermometer Calibration Service
PB89128888

SP 250–24 Standard Cell Calibrations
PB88123690

SP 250–25 Calibration Service for Inductive Voltage Dividers

SP 250–26 NBS Phase Angle Calibration Services
PB88225636

SP 250–27 AC–DC Difference Calibrations
PB892222616

SP 250–28 Solid-State DC Voltage Standard Calibrations
PB88168703

SP 250–29 Traceable Frequency Calibrations
PB88168364

SP 250–30 GOES Satellite Time Code Dissemination: Description and Operation
PB88168760

SP 250–31 Mass Calibrations
PB89153894

SP 250–32 A Calibration Service for 30 MHz Attenuation and Phase Shift
PB88238324

SP 250–33 A Calibration Service for Voltage Transformers and High-Voltage Capacitors
PB882252903

SP 250–34 High Vacuum Standard and Its Use
PB89193841

SP 250–35 The Calibration of Thermocouples and Thermocouple Materials
PB89209340

SP 250–36 A Calibration Service for Current Transformers

SP 250–40 Absorbed-Dose Calibration of Ionization Chambers in a ^{60}Co Gamma-Ray Beam

* Entries Entries containing a stock number (SN003–003–) and price can be purchased from the Superintendent of Documents, U.S. Government Printing Office, Washington, DC 20402. GPO will accept checks, money orders, VISA, and MasterCard. For more infomation, or to place an order, call (202) 783–3238. Be sure to cite the stock number on all orders.

Entries containing PB numbers can be purchased from the National Technical Information Service, Springfield, VA 22161. NTIS will accept American Express in addition to the payment methods listed for GPO. For more information call (703) 487-4650; to place an order call (800) 336-4700. Be sure to cite the PB number on all orders.

Entries without stock or PB numbers are in preparation.

U.S. Department of Commerce
National Institute of Standards and Technology
Gaithersburg, MD 20899

Official Business
Penalty for Private Use $300