NBS MEASUREMENT SERVICES:
A Calibration Service for Voltage Transformers and High-Voltage Capacitors

William E. Anderson

Electrosystems Division
Center for Electronics and Electrical Engineering
National Engineering Laboratory
National Bureau of Standards
Gaithersburg, MD 20899

June 1988

U.S. DEPARTMENT OF COMMERCE, C. William Verity, Secretary
NATIONAL BUREAU OF STANDARDS, Ernest Ambler, Director

Library of Congress Catalog Card Number: 88-600542

National Bureau of Standards Special Publication 250-33
Natl. Bur. Stand. (U.S.), Spec. Publ. 250-33, 37 pages (June 1988)
CODEN: XNBSAV

U.S. GOVERNMENT PRINTING OFFICE
WASHINGTON: 1988

For sale by the Superintendent of Documents, U.S. Government Printing Office, Washington, DC 20402-9325

— PREFACE —

Calibrations and related measurement services of the National Bureau of Standards (NBS) provide the means for industry, government agencies, academia, and others to relate the measurements they make to national standards and, by extension, to the measurement systems of other countries throughout the world. It is of crucial importance to improving U.S. productivity, efficiency, and quality—in short our competitive stance—that measurements of appropriate accuracy can be made at all stages of product development, production, and marketing and that it is possible to refer the results of these measurements to each other in a meaningful way. NBS services provide essential support for satisfying these needs, as well as measurement needs arising from societal concerns such as health, safety, natural resources, and defense. The requirements of NBS clientele range from the highest levels of accuracy realizable from advanced science and technology to the practical levels of accuracy needed to support routine production. A reference-level measurement may be the result of days of painstaking individual effort or may be provided by a semi-automatic measuring system in minutes. The variation in customer needs and hence in NBS services responsive to those needs is great.

The more than 300 different calibration services, measurement assurance services, and special tests that are offered by NBS are described in NBS Special Publication 250, *NBS Calibration Services Users Guide.* The *Guide* provides essential technical details of NBS calibration and related measurement services, such as levels of accuracy provided by NBS and the requirements to be met by customers' transfer standards. It also provides information needed for placing orders for these services and identifies technical and administrative contacts for each service.

Technical descriptions in the *Users Guide* are intended to be restricted to the material needed by a potential customer to decide if a given service will meet that customer's needs. Frequently, a customer may be interested in more detailed and extensive information, such as the way in which the errors associated with a measurement are assessed. Beginning in 1987, NBS established a Special Publication 250 series which supplements the *Guide.* Each publication in this series provides a detailed technical description of a specific NBS calibration service, or closely related set of services, and includes:

- specifications for the service
- design philosophy and theory
- description of NBS measurement system used to provide service
- NBS operational procedures
- measurement uncertainty assessment, including error budget, identification of systematic and random errors
- NBS internal quality control procedures

Special Publication 250-33, **A Calibration Service for Voltage Transformers and High-Voltage Capacitors**, describes services offered under NBS Test Numbers 54510C through 54513C (voltage transformers) and 52400C (high-voltage capacitors at power frequency). These services are provided by the Applied Electrical Measurements Group in the Electrosystems Division as part of a series of services offered by the Division in support of the transmission and distribution of electric power.

Table of Contents

1 INTRODUCTION **1**

2 RANGE OF SERVICES **3**

2.1 Voltage Transformers 3

2.2 Capacitors 4

3 MEASUREMENT METHODOLOGY **5**

3.1 Basic Measurement Circuits 5

3.2 Capacitors 6

3.3 Voltage Transformers 8

4 MEASUREMENT INSTRUMENTATION **14**

5 MEASUREMENT UNCERTAINTIES **21**

5.1 Voltage Transformers 21

5.2 Capacitors 23

6 ACKNOWLEDGMENTS **24**

7 REPORT FORMAT **24**

APPENDIX **27**

REFERENCES **30**

List of Figures

1 Schering bridge. 2

2 Basic measurement circuit for the calibration of a high-voltage capacitor. 5

3 Basic measurement circuit for the calibration of a voltage transformer. 6

4 Basic measurement circuit for the 4-terminal calibration of large capacitors. 7

5 Correct measurement circuit for the calibration of a voltage transformer. 9

6 A voltage transformer measurement circuit with a wiring defect. 10

7 A voltage transformer measurement circuit with a wiring defect. 10

8 An improved measurement circuit for the calibration of voltage transformers. 11

9 Equivalent circuit of a voltage transformer. 12

10 Equivalent circuit of a voltage transformer with secondary burden. 13

11 Capacitive burden box. 13

12 Basic current comparator bridge. 15

13 Current comparator bridge with high-voltage resistor for in-phase current balance. . 16

14 Current comparator with superior in-phase current balance. 16

15 Current comparator bridge modified for 4-terminal capacitance measurements. . . . 18

16 Current comparator bridge with external range extender. 19

17 Circuit for checking operation of dissipation factor measurement of current comparator bridge. 20

18 Circuit for determining correction to measurement shown in figure 17. 21

List of Tables

1 Measurement Capability 3
2 Gas Density Dependence 8
3 ANSI Standard Burdens 12
4 Check Standard History 18
5 Dissipation Factor Check Standard 22
6 Contributions to Uncertainty 23
7 Total Estimated Uncertainties 23

A Calibration Service for Voltage Transformers and High-Voltage Capacitors

William E. Anderson

Abstract

The National Bureau of Standards calibration service for voltage transformers and high-voltage capacitors is described. The service for voltage transformers supports the measurement of ratio correction factors and phase angles at primary voltages up to 170 kV and secondary voltages as low as 10 volts at 60 Hz. Calibrations at frequencies from 50–400 Hz are available over a more limited voltage range. The service for high-voltage capacitors supports the measurement of capacitances and dissipation factors at applied voltages ranging from 100 V to 170 kV at 60 Hz depending on the nominal capacitance. Calibrations over a reduced voltage range at other frequencies are also available. As in the case with voltage transformers, these voltage constraints are determined by the facilities at the National Bureau of Standards.

Key words: calibration; capacitors; dissipation factor; electric power; electric standards; NBS services; voltage transformers

1 INTRODUCTION

The purpose of this report is to provide a description of the National Bureau of Standards (NBS) methodology for calibrating high-voltage capacitors and transformers. It is hoped that this might benefit the customers in several ways. First, by understanding how NBS makes these measurements, the customers might be able to define weaknesses in their own measurement procedures and correct them. Secondly, the customers might be able to make better use of the data in the calibration report (e.g., to understand what is meant by the uncertainty statement). Thirdly, the customers might be able to better specify the required test conditions so that information more pertinent to their needs might be obtained at a lesser cost.

This report describes two different calibration services: high-voltage capacitors and voltage transformers. At NBS these two services are performed using the same equipment. In fact, in order to calibrate a voltage transformer, one of the steps is to measure the ratio of two capacitors. The two services are therefore discussed in parallel.

There are several different ways to measure the ratio and phase angle of a voltage transformer. Harris [1] categorizes them as the direct versus comparative methods and within these two classifications either the deflection or null measurement technique. A direct measurement is defined here to mean a measurement in which the quantity of interest can be determined without a comparison to some absolute standard.

In the "direct deflection method" the primary and secondary voltage vectors are each directly measured. This approach is, in general, of most value for lower voltage transformers (i.e., primary voltages of order 100 volts). Even then more accurate, less difficult measurements can be made using one of the other techniques.

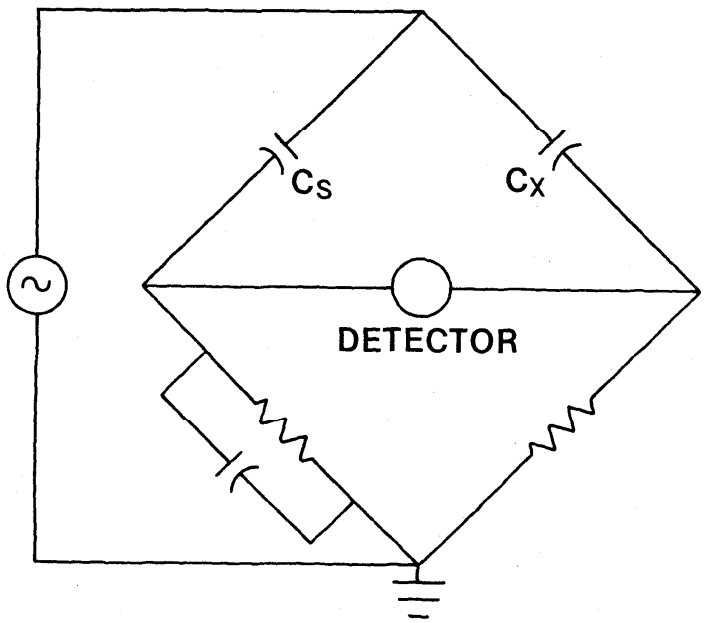

Figure 1. Schering bridge.

In the past NBS had used a "comparative null method" to calibrate voltage transformers. The unknown transformer was compared to an NBS reference transformer using a voltage comparator consisting of a variable resistive divider and a mutual inductor. Reference transformers were available with ratios ranging from 1/1 up to 2000/1. Measurement uncertainties in the comparison of the unknown transformer with the reference transformer were $\pm 0.01\,\%$ for ratio and ± 0.3 minutes for phase angle. The ratio and phase angle of the reference transformers were known to about the same accuracy. There are several disadvantages to this approach. Since the comparator has a limited range, several reference transformers must be available to cover the anticipated users' needs. The ratio and phase angles of each one of these transformers must be carefully determined over the secondary voltage range of interest. These transformers then have to be rechecked at regular intervals to determine if the ratios and phase angles have changed.

If a direct measurement method were available that was sufficiently accurate and straightforward to make the calibration of these reference transformers a simple task, then that method could be used to measure the customer's transformer directly. At NBS, the "direct null method" in use originally involved balancing the secondary of the reference transformer against the output of a resistive divider used in conjunction with a variable mutual inductor to provide phase angle balance. Such a measurement was difficult because the resistive divider ratio changed with heating. Since the late 1960's a "direct null method" has been available that is straightforward and accurate and is now used at NBS in place of comparative methods using reference transformers.

Capacitors are invariably measured by balancing the unknown capacitor against a known standard using some type of bridge arrangement. There are a variety of such bridges described in the literature [2]. The one most used in high-voltage applications in the last sixty years is the Schering bridge (figure 1). Two high-voltage arms of this bridge consist of the standard and unknown capacitors. The two low voltage arms are resistors (one has a parallel capacitor for phase angle balance).

The main limitation of the Schering bridge is a result of the fact that the low side of the unknown and standard capacitors are not at ground potential at bridge balance. Therefore, without careful guarding of the bridge components, stray currents can affect the bridge accuracy. The voltage applied to the shields to eliminate these stray currents must be adjusted for both magnitude and phase. Unfortunately this procedure is not perfect and bridge accuracy is consequently affected. Another limitation of the Schering bridge is the inherent inaccuracy of the resistance ratio of the two low-voltage arms.

The current comparator bridge developed by Kusters and Petersons [3] allows the intercomparison of two capacitors with their low-voltage terminals at ground potential, thereby eliminating the main objection in using the Schering bridge. This bridge used in both the voltage transformer and capacitor calibrations will be described in some detail in Section 4. There is an important distinction between the calibration of voltage transformers and capacitors at NBS. The voltage transformer calibration is of the direct null type, and the capacitor calibration is of the comparative null type. In other words, the accuracy of the capacitance measurements ultimately depends on the uncertainty in assigning a value to a standard capacitor. The standard capacitor used in this service is directly traceable to the calculable cross capacitor [4] which, in turn, is known in terms of the fundamental unit of length.

The remainder of this document is divided into the following subject areas: voltage transformers and capacitors covered by this service, measurement methodology, measurement instrumentation, analysis of uncertainties, and calibration report format. The contents of this document plus the cited references should provide the reader with a fairly complete description of the voltage transformer and high-voltage capacitor calibration service at NBS.

2 RANGE OF SERVICES

The NBS measurement capabilities are summarized in table 1 and discussed in more detail below.

Table 1. Measurement Capability

Voltage Transformers - 60 Hz		
Primary Voltage	Secondary Voltage	Phase Angle
50–170,000 V rms	> 50 V rms	< 11 mrad
Capacitors - 60 Hz		
Applied Voltage[1]	Capacitance	Dissipation Factor
50–170,000 V rms	10 pF – 0.001 F	< 0.011

2.1 Voltage Transformers

Presently, voltage transformers (assuming they are of sufficient quality to be used as laboratory standards) with primary voltages up to 170 kV at a frequency of 60 Hz can be calibrated at NBS. This maximum voltage is imposed by the supply transformer and not by limitations in the measurement instrumentation. Therefore, this constraint should not be considered rigid and customers should contact the NBS about present physical limitations.

The largest portion of the voltage transformers submitted to NBS are calibrated with a total estimated uncertainties of ±300 ppm in ratio, and ±0.3 mrad in phase angle. These transformers are

[1] Total power must be less than 50 kVA.

of sufficient quality to be considered transfer standards. Historically these transformers have shown excellent long-term stability rarely changing by more than 100 ppm in ratio or 0.1 mrad in phase (at or below rated burden) for periods as long as thirty years or more. In general the voltage and burden dependence of these transformers are the major contributors to the measurement uncertainties. These uncertainties (±300 ppm for ratio, ±0.3 mrad for phase angle) meet the accuracy requirements of most of our customers.

Voltage transformers of a higher accuracy class often serve as transfer standards for manufacturers of voltage transformers and voltage transformer test sets (voltage comparators). The estimated uncertainties for these transformers are ±100 ppm in ratio, and ±0.1 mrad in phase angle. They are generally designed for use with very small burdens (< 15 volt-amperes).

The above discussion for voltage transformers assumes a voltage at a frequency of 60 Hz. The National Bureau of Standards has some capability to calibrate voltage transformers from about 50 Hz to 400 Hz (at the lower voltage and power ranges). Such calibrations are infrequent and customers interested in these voltage ranges and measurement uncertainties should contact NBS directly.

2.2 Capacitors

The maximum voltage for capacitor calibrations is presently 170 kV at 60 Hz. The restrictions is imposed by the supply transformer and not by limitations in the measurement instrumentation. Therefore, this constraint should not be considered time invariant and customers should contact NBS about present physical limitations.

The maximum power available is 50 kVA (i.e., $C < 50,000/\{2\pi 60 V^2\}$ where V is the applied voltage and C is the capacitance). In order to energize the capacitors a resonant circuit is often required to couple the necessary energy into the customer's capacitor. Since this requires the availability of an assortment of series and parallel inductors and capacitors, there are undoubtedly some capacitors that, despite having a burden of less than 50 kVA, cannot be calibrated. The customer should contact NBS before submitting a capacitor for calibration. As with voltage transformers, NBS restricts its calibration services to those devices of sufficient quality to be used as the transfer standards. This in general depends upon the stability of the capacitor (i.e., whether the measured capacitance and dissipation factor are intrinsic properties of the device itself or instead are largely a function of conditions at the time of the calibration). For example, small two-terminal capacitors (less than 10,000 picofarads) may be significantly influenced by stray capacitance in the measurement circuit. There are cases, however, where one component (capacitance or dissipation factor) is stable and the other is not. For example, power factor capacitors often have relatively stable dissipation factors but have capacitances that vary significantly with applied voltage (even demonstrating hysteresis effects) and temperature. In this case a calibration of dissipation factor would be meaningful. It also is important that the capacitors have connectors[2] that are generally available, e.g., BNC, GR, UHF, BPO, or Type N.

The most accurate capacitor calibrations have an uncertainty of ±25 ppm for capacitance and an uncertainty of $\pm 5 \times 10^{-6}$ for dissipation factor. For capacitors with large dissipation factors, the dissipation factor uncertainty is generally at least ±1 % of the measured value $\pm 5 \times 10^{-6}$. The uncertainty in the capacitance value and the dissipation factor can be largely a function of the stability of the capacitor.

[2] Certain commercial products are identified. In no case does such identification imply recommendation by NBS, nor does it imply the products are the best available.

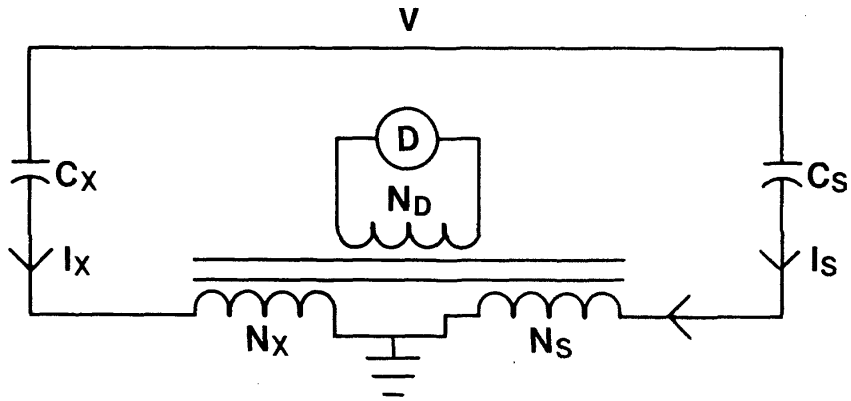

Figure 2. Basic measurement circuit for the calibration of a high-voltage capacitor.

3 MEASUREMENT METHODOLOGY

3.1 Basic Measurement Circuits

The current comparator bridge used to calibrate voltage transformers and high-voltage capacitors will be discussed in considerable detail in Section 4. A brief discussion of this bridge will be presented here in order to facilitate understanding of the NBS measurement methodology. A simplified circuit for measuring the ratio of two capacitors is shown in figure 2. (The active circuitry to achieve dissipation factor balance is not included). At balance

$$\frac{V2\pi f C_x N_x}{N_D} = \frac{V2\pi f C_s N_s}{N_D}, \tag{1}$$

where f is the frequency. This can be rewritten

$$C_x = \frac{N_s}{N_x} C_s. \tag{2}$$

The simplified circuit for measuring the ratio of voltage transformers is shown in figure 3. At balance

$$\frac{V_p 2\pi f C_p N_x}{N_d} = \frac{V_s 2\pi f C_s N_s}{N_d} \tag{3}$$

or,

$$\frac{V_p}{V_s} = \frac{N_s C_s}{N_x C_p}. \tag{4}$$

The ratio of the two capacitors in (2) can be measured using the circuit discussed above in figure 2.

The measurement of a voltage transformer or a capacitor both involve the measurement of the ratio of two standard capacitors. The measurement of capacitors will be discussed below followed by a discussion on the measurement of voltage transformers.

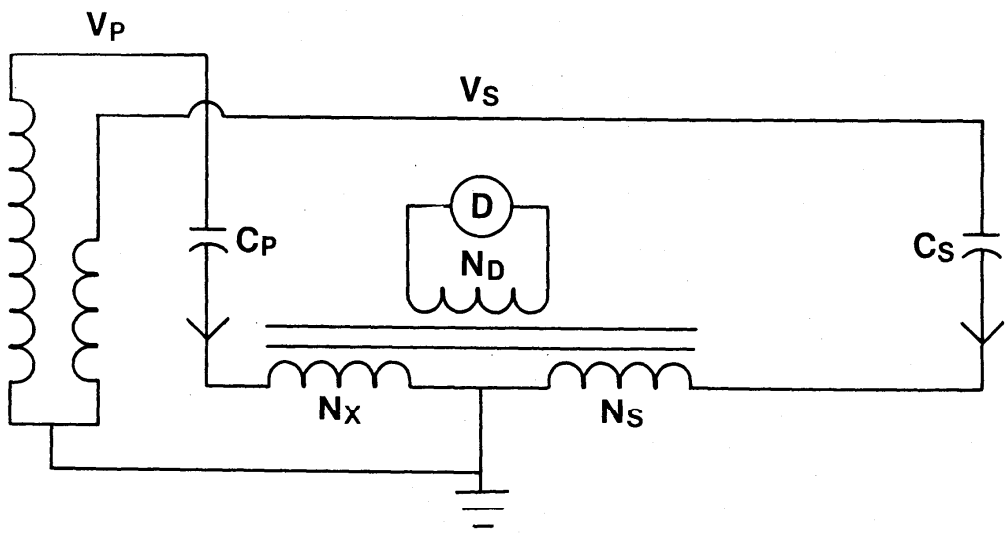

Figure 3. Basic measurement circuit for the calibration of a voltage transformer.

3.2 Capacitors

General Measurement Technique

Capacitors are measured by balancing the current through the capacitor under test against the current through a standard air or compressed gas capacitor as shown in figure 2. Large capacitors (> 1 microfarad) necessitate a four-terminal measurement as shown in figure 4. A discussion of this measurement will be discussed in Section 4. The four-terminal measurement does eliminate the effect of the leads in the measurement of the capacitance and dissipation.

Information Necessary to Initiate Calibration

The customer usually only needs to specify the voltage and the frequency. For small capacitors (10,000 picofarads or less), it is essential that the low-voltage electrode and the conductor leading to the measurement instrumentation be shielded by a grounded conductor. Otherwise, the stray capacitance may cause significant measurement error. The National Bureau of Standards requires some sort of standard connector (BNC, UHF, GR, BPO, or Type N) at the low-voltage terminal in order to connect to the measurement system. Larger capacitors do not need to be shielded but must be measured as a four terminal admittance because of the non-negligible lead impedance. A description of how this measurement is done will be covered in Section 4. Capacitors must be stable and reproducible in order to be considered standards, and, hence, warrant an NBS calibration. Power factor capacitors (large capacitors used to tune distribution lines, etc.) are often special cases. Their dissipation factors (in-phases component of the current divided by quadrature component) are often quite stable but their capacitance values are often not. Because of the importance of these capacitors to the electrical industry, they are often acceptable for calibration even though they do not meet normal stability requirements.

Although the instrumentation has been used to calibrate a million-volt standard capacitor at rated voltage, the instrumentation does impose some limitations on the voltage applied to the capacitor. The only limitation on the maximum voltage is that the current through the standard capacitor should be no larger than 10 milliamperes. In order to have reasonable sensitivity, the current

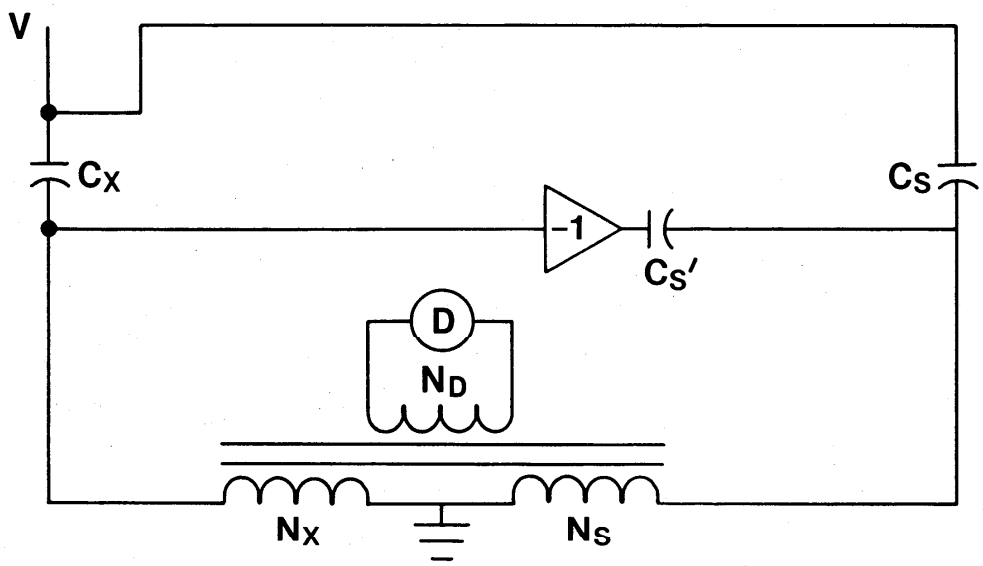

Figure 4. Basic measurement circuit for the 4-terminal calibration of large capacitors.

should be at least 10 microamperes. The current through the customer's capacitor can range from 10 microamperes to 1000 amperes.

Voltage Dependence

For the calibration of both capacitors and voltage transformers, the voltage coefficient of the standard capacitor is important. The unit of capacitance at NBS is maintained at low voltage. This value must be transferred to the high-voltage standard capacitors at their working voltages. At NBS, considerable work was done to modify a commercial high-voltage standard capacitor to minimize its voltage coefficient and to determine the magnitude of that voltage coefficient [5]. The National Bureau of Standards was able to demonstrate that, if care were taken, a well-designed standard capacitor should change capacitance by only a few ppm from 0 to 300 kV. A more recent paper also discusses the problem of the voltage dependence of standard capacitors and describes an international comparison of high-voltage capacitor measurements [6]. (This paper also discusses the effect of shipping and handling on the measured capacitance of a commercial standard capacitor.) The voltage dependence of a compressed gas capacitor principally arises from the coulombic attraction of the two electrodes and is hence quadratic in nature. The capacitor should be expected to vary only slightly at lower voltages. Therefore, a capacitor rated at 200 kV should be quite effective in measuring the voltage dependence of another capacitor rated at 20 kV.

Temperature Dependence

Another concern is the temperature dependence of the high-voltage standard capacitor. The typical dependence is about +20 ppm/°C. This dependence arises solely from the thermal expansion of the components of the capacitor. Since C is directly proportional to the electrode area and inversely proportional to the electrode separation, the thermal coefficient of the standard capacitor is proportional to the linear coefficient of expansion. Although the laboratories at NBS are fairly stable in temperature, the comparison of the high-voltage standard capacitor to the low-voltage standard (which has a thermal coefficient of 2 ppm/°C) is done at the beginning and conclusion of the mea-

Table 2. Gas Density Dependence

GAS	$\partial C/\partial P$ at $T = 22.8\,°C$ (units of picofarads/pascal)
SF_6	$(2.012 \pm 0.022) \times 10^{-6} + [(5.1 \pm 0.6) \times 10^{-13}]P$
CO_2	$(0.903 \pm 0.015) \times 10^{-6} + [(1.4 \pm 0.4) \times 10^{-13}]P$
He	$(0.075 \pm 0.004) \times 10^{-6} + [(0.2 \pm 0.1) \times 10^{-13}]P$

surement process. The average value is then used in order to minimize the problem associated with this thermal drift.

Gas-Density Dependence

Compressed gas standard capacitors can have an additional source of error associated with gas leakage. Values of $\partial C/\partial P$ (to first order in pressure) measured at a temperature of 22.8 °C are shown in table 2 for three different gases [6].

The gas pressure, P, is in units of pascals and the capacitance in picofarads. For a 100-pF capacitor with SF_6 as the dielectric gas, a 1-psi (6900-pascal) leak would cause the capacitance to decrease by about 140 ppm. It must be stressed that this change is valid only if the pressure change is caused by the loss of gas and not by the lowering of the gas temperature. As can be seen in table 2, the gas density coefficient is largest for SF_6. Customers using compressed gas capacitors for standards might be advised to monitor the gas pressure with a good quality pressure gauge. Leaking SF_6-filled capacitors should be checked often against a good low-voltage standard.

3.3 Voltage Transformers

Information Necessary to Initiate Calibration

In order to calibrate a voltage transformer, several different parameters must be specified: frequency; windings and/or range; secondary voltage; and burden or impedance across the secondary winding. In some cases, for example when there is a tertiary winding, additional parameters may be required.

Labeling of Terminals

There are some standard conventions as to which of the primary and secondary taps are to be at low or ground potential and which are to be at rated voltage. Some transformers have one tap of the secondary and one tap of the primary winding marked by a "±". These two taps are connected together and to ground potential. Some transformers use the designators H1, H2 for the primary taps, and X1, X2 (and Y1 and Y2 for the transformers with two secondaries) for the secondary taps. Sometimes the secondary winding has a third tap, X3. By convention the primary and secondary taps with the largest number are connected together and to ground. If the customer wants some other arrangement, they should notify NBS prior to the calibration.

Load Imposed by NBS Measurement System

The basic measurement circuit is shown in figure 5. The two capacitors shown are three-terminal standard capacitors. Their dissipation factors are typically less than 5×10^{-6}. The capacitor connected to the secondary usually has the nominal value of 1000 pF. Therefore, for 60-Hz measurements, the capacitor imposes a negligible load (2.7 megohms or 0.005 volt-amperes at 120 volts) on the voltage transformer. Negligible in this case means that the effect of this burden on the measured ratio and phase angle can not be observed at the ppm level. The digital voltmeter (DVM) in figure 5

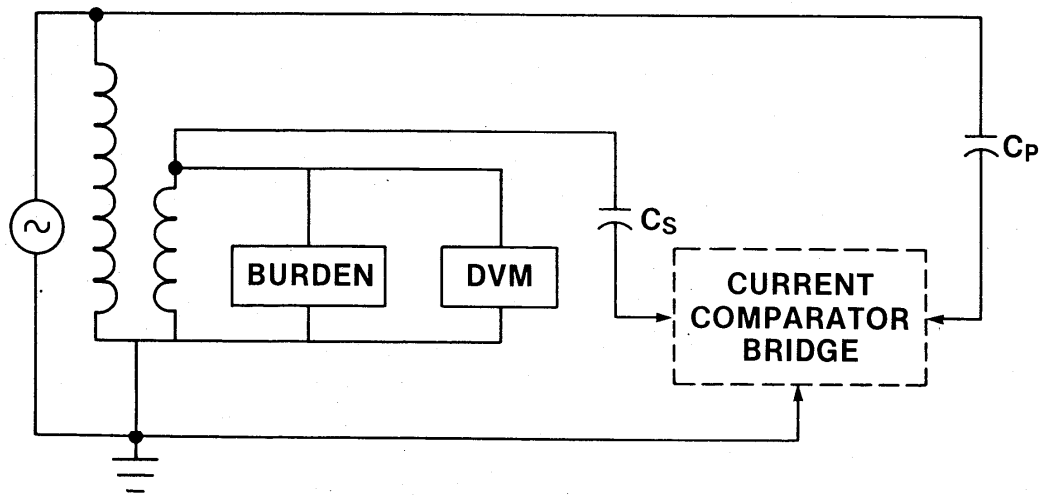

Figure 5. Basic measurement circuit for the calibration of a voltage transformer with a digital voltmeter (DVM) and secondary burden.

has an estimated uncertainty of less than ±0.5 % of the reading and measures true-rms ac volts. The internal impedance of the DVM is equal to or greater than a megohm.

Possible Errors Caused by Improper Wiring

The wiring of the circuit shown in figure 5 is critical. For example, it is important that the two capacitors be connected directly to the primary and secondary terminals of the transformer. Consider instead figure 6. The capacitor C is connected to the burden and the DVM instead of directly to the secondary terminal of the transformer. If the secondary burden were an ANSI standard burden ZZ (36 ohms at 120 volts, see table 3) and the resistance of the lead connecting the burden to the transformer were 10 milliohms, the incorrect wiring shown in figure 6 would cause an error in the transformer ratio measurement of about 0.03 %. For higher impedance burdens this becomes less of a problem but, in general, one must take precautions to avoid including the voltage drop in the lead connecting the transformer to the burden as part of the voltage on the transformer secondary winding to be measured.

Another major concern in the measurement of the ratio and phase angle of a voltage transformer is the proper definition of the ground point and the avoidance of ground loops. This can best be illustrated by the presentation of a few examples. In figure 7, some common mistakes are shown. The transformer is energized in such a manner that significant current is forced to flow between the transformer ground and the circuit ground. The resulting voltage drop in the lead connecting the transformer and ground will be part of the ratio and phase angle measured. The high-voltage capacitor is not connected directly to the primary of the transformer under test. The measurement of the ratio and phase angle, therefore, includes the effect of the voltage drop in the lead between the point where the capacitor is connected to the power source and the transformer. In addition, as there are three different "ground" points in the circuit and it is not, in general, possible to know the voltages and impedances between these points, a measurement error is probable.

In figure 8 the problem has been eliminated by defining the low-voltage terminal of the transformer as ground. Although this point may significantly differ from the building or utility ground, from the measurement point of view this is the correct ground. It is important that the shields of the

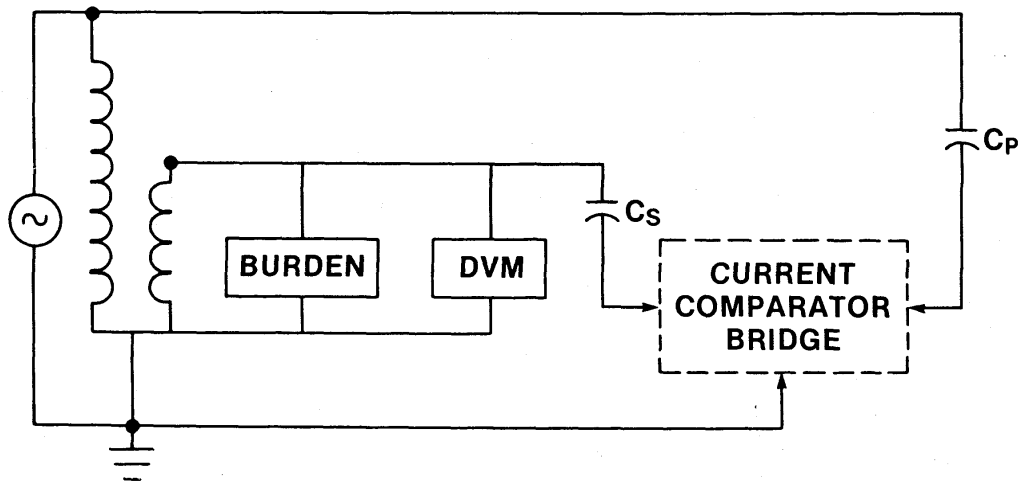

Figure 6. Measurement circuit for the calibration of a voltage transformer. Connection of low-voltage capacitor as shown is incorrect.

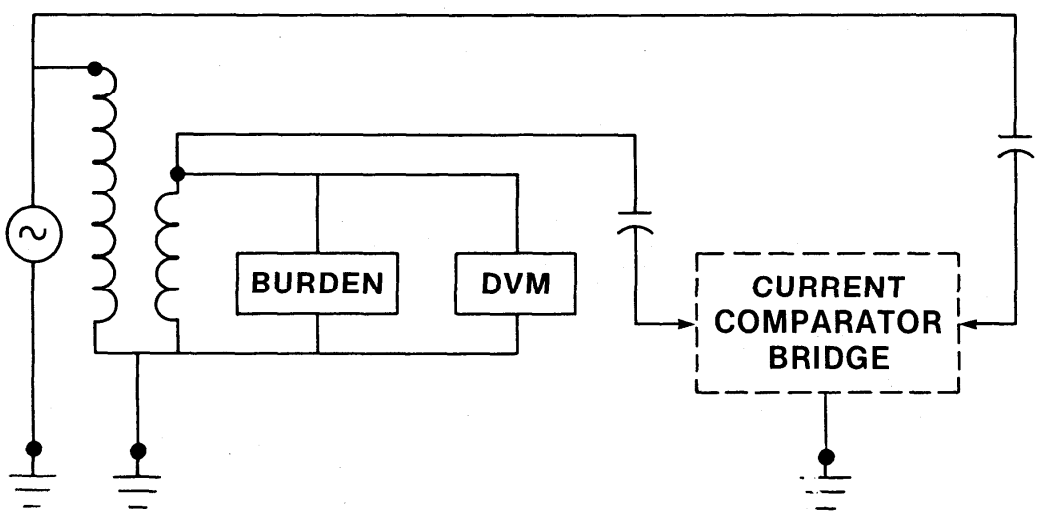

Figure 7. Measurement circuit for the calibration of a voltage transformer. Grounds are poorly defined.

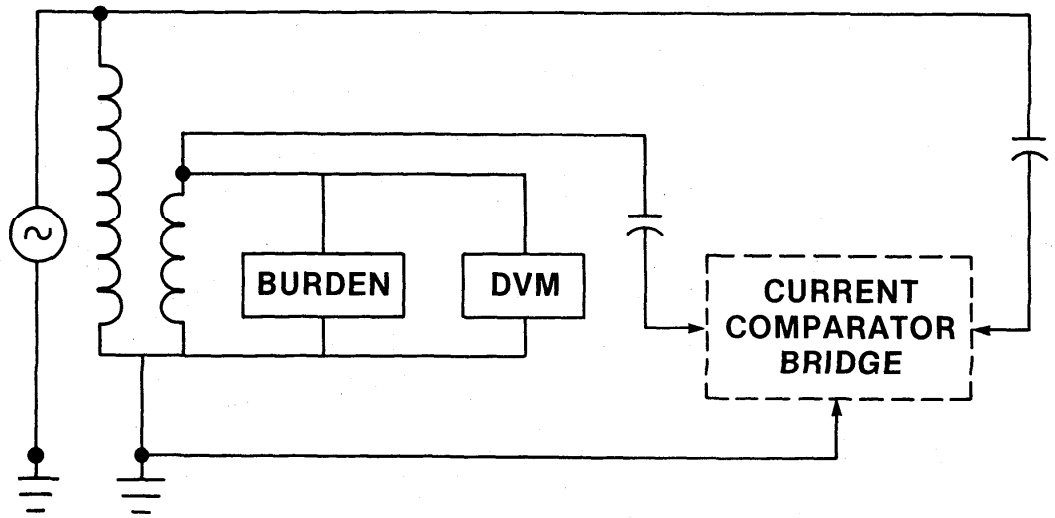

Figure 8. Measurement circuit for the calibration of a voltage transformer. Measurement ground is defined. Transformer excitation current flows from the measurement ground to building ground.

three-terminal capacitors, the bridge detector ground, and all other measurement grounds each be connected directly to this point.

In figure 5 the preferred method of wiring a voltage transformer calibration circuit is shown. The customer's transformer is connected in such a way that the energizing current does not flow between the transformer and the measurement ground. All measurement grounds are connected to the transformer ground point. The two capacitors are connected directly to the primary and secondary terminals of the transformer. Only one ground is used in the circuit. While it is not always possible to connect the transformer as in figure 5, this is the best choice. Otherwise tests are required to ensure that systematic errors are not compromising the measurement results.

Burdens

The burden attached to the secondary of the customer's transformer (as shown in figure 5) is specified by the customer. In general this would not be the burden corresponding to the maximum volt-ampere rating of the transformer but instead would be equal to the burden attached to the transformer in its intended use. For example, if the transformer will only have a digital voltmeter attached to its secondary, a calibration with a secondary impedance of a megohm would be more useful than one with an ANSI ZZ burden attached. Since the ANSI burdens are often requested, they are summarized in table 3 [7]. By convention these burdens are defined for a frequency of 60 Hz only.

Substitute Burdens

If the customer does not send the secondary burden with the transformer, the National Bureau of Standards will provide the burden. It is not practical to have available and adequately characterized all of the anticipated burdens. Fortunately this is not necessary. If the ratio and phase angle of a transformer is known for two different burden values, the ratio and phase angle at any other burden can be calculated (with certain limitations) [8]. A derivation of the formulas relating the ratios and phase angles at zero and some other known burden value are given in the appendix and presented in abbreviated form below.

Table 3. ANSI Standard Burdens

ANSI Burden	Volt-amperes	Power Factor (Lagging)
W	12.5	0.10
X	25	0.70
M	35	0.20
Y	7	0.85
Z	200	0.85
ZZ	400	0.85

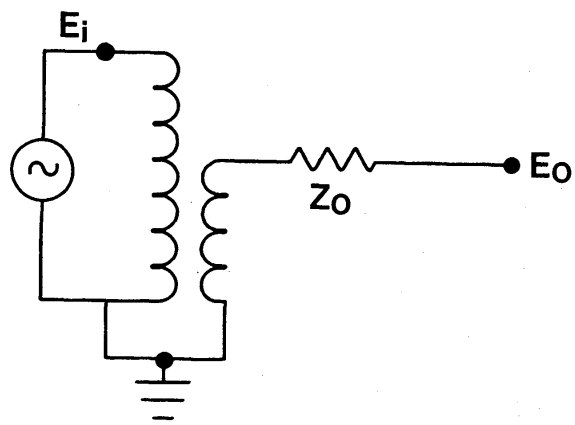

Figure 9. Equivalent circuit of a voltage transformer.

The voltage transformer will be represented as an ideal transformer with some unknown series output impedance, Z_o , as shown in figure 9. The model has been shown to be sufficiently accurate experimentally. The relationship between the input voltage, E_i , and the output voltage with zero burden, E_o, is:

$$\frac{E_i}{E_o} = N\mathrm{RCF}_o e^{-j\Gamma_o} = \left|\frac{E_i}{E_o}\right| e^{-j\Gamma_o} \tag{5}$$

where N is the nominal (or turns) ratio of the transformer, RCF is the ratio-correction factor ($N \times$RCF= actual ratio) at zero burden, Γ_o is the angle by which the secondary voltage vector leads the primary voltage vector and $j = \sqrt{-1}$. A similar relationship exists between the input voltage, E_i, and the output voltage E_c, with secondary burden C (having impedance Z_c) shown in figure 10:

$$\frac{E_i}{E_c} = N\mathrm{RCF}_c e^{-j\Gamma_c} \tag{6}$$

where RCF_c is the ratio correction factor with secondary burden C and Γ_c is the corresponding phase angle. If the transformer is measured at zero burden (RCF_o and Γ_o) and at burden T (RCF_t and Γ_t), the ratio correction factor and phase angle at burden C are approximately given by:

$$\mathrm{RCF}_c \approx \mathrm{RCF}_o + \frac{B_c}{B_t}[(\mathrm{RCF}_t - \mathrm{RCF}_o)\cos(\theta_t - \theta_c) + (\Gamma_t - \Gamma_o)\sin(\theta_t - \theta_c)], \tag{7}$$

where $B_c = 1/Z_c$ is the burden in ohms^{-1} of the impedance Z_c, and

$$\Gamma_c \approx \Gamma_o + \frac{B_c}{B_t}[(\Gamma_t - \Gamma_o)\cos(\theta_t - \theta_c) - (\mathrm{RCF}_t - \mathrm{RCF}_o)sin(\theta_t - \theta_c)]. \tag{8}$$

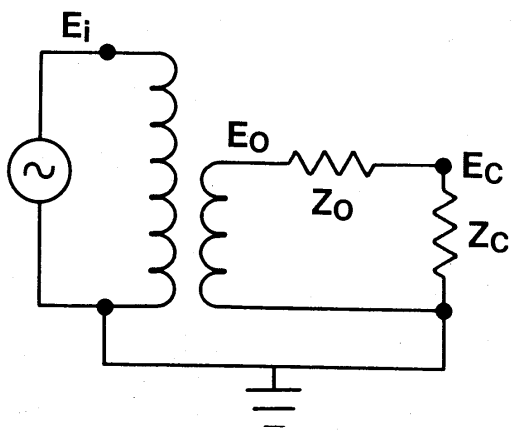

Figure 10. Equivalent circuit of a voltage transformer with secondary burden Z_c.

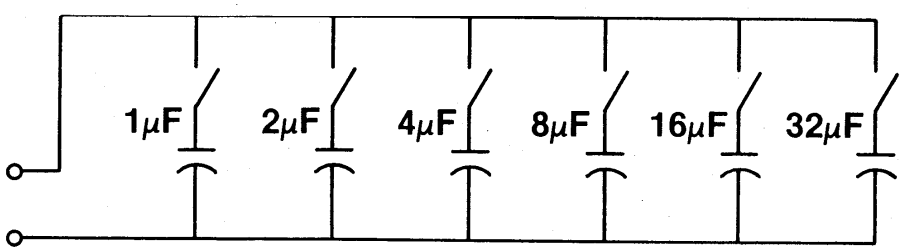

Figure 11. Capacitive burden box.

The power factor of burden C is $\cos\theta_c$, RCF_c is the ratio correction factor calculated for burden C, and Γ_c is the angle by which the secondary voltage leads the primary voltage for burden C.

The equations (7) and (8) can be used to calculate the RCF and phase angle for some secondary burden, C, if the ratio correction factors and phase angles are known at some other burden, T, and at zero burden. In practice, at NBS, capacitive burdens are used for the "T" or known burdens in eqs (7) and (8). The main reason is their stability. The heat generated in a large resistive burden, for example, is likely to cause the burden's impedance value to vary. Capacitors, in addition, are compact so even the ZZ burden in table 3 is easy to handle. At NBS, capacitive burden boxes have been constructed in a binary layout (figure 11) so that capacitors from 1 to 32 microfarads can be switched in and out allowing any capacitance value from zero to 63 microfarads. Since a ZZ burden is equivalent to a 74 microfarad capacitor at 120 volts, two such burden boxes are sufficient for nearly all the calibrations at NBS.

Several approximations were made to derive eqs (7) and (8). The approximations relate to the relative ratio of the transformer's output impedance, Z_o, to the impedance of the secondary burden Z_t or Z_c. The smaller this ratio, the more accurate are eqs (7) and (8). This ratio also affects the differences, $\mathrm{RCF}_t - \mathrm{RCF}_o$ and $\Gamma_t - \Gamma_o$. If the ratio correction factor difference is 0.001 or less, and if the phase angle difference is 1 milliradian or less than eqs (7) and (8) should be accurate to within ± 10 ppm for the ratio correction factor and to within ± 10 microradians for the phase angle if it is assumed that the ratio of the burdens is known with no more than a ± 1 percent uncertainty. Data over the years has indicated that eqs (7) and (8) are always at least that accurate. In order to identify any problems, an extra measurement is made at a different secondary burden to test the

predictive capabilities of eqs (7) and (8) for the transformer under test. If a problem is discovered, the error budget is adjusted accordingly.

The above discussion might enable customers of the voltage transformer calibration service to better design their calibration requests. Using eqs (7) and (8), the customer might be able to reduce the number of measurements required. A note of caution is in order. It is likely that using a zero burden and a 10 volt-ampere burden result to predict the transformer's behavior at a ZZ burden may lead to large inaccuracies. The reasons are twofold. First, the differences $\mathrm{RCF}_t - \mathrm{RCF}_o$ and $\Gamma_t - \Gamma_o$ are likely to be small for a burden as small as 10 volt-amperes and extrapolations can cause large errors. The second reason can be seen from figure 10. The higher current of the ZZ burden will cause Z_o to heat up and increase in value, leading to errors if eqs (7) and (8) are used. Somewhat better results are likely if one used a ZZ burden result to predict a transformer's behavior at 10 volt-amperes. However, it is best to choose burden, T, to have a volt-ampere rating the same order of magnitude as the burden of interest, C. Also, the values in eqs (7) and (8) are all to be measured at the same frequency and at the same secondary voltage.

Harmonic Effects

The measurement of the ratio and phase angle of a voltage transformer can be affected by the presence of harmonics in the voltage waveform. If a tuned null detector is not used, the balance of a bridge circuit can be difficult in the presence of harmonics and often a precise balance is not possible resulting in increased measurement uncertainties. Harmonics can also lead to errors in measuring the magnitude of the secondary voltage. For example, if an average reading, rms scaled voltmeter measured a 100-volt rms fundamental with an in-phase 3-volt rms third harmonic, the meter would read 101 volts. Setting the voltage to read 100 volts on the meter would result in a one volt discrepancy between the intended and actual voltage. Many transformers have large enough voltage coefficients for this one-volt error in the voltage setting to have a non-negligible effect on the measured ratio correction factor and phase angle. If instead, a true rms voltmeter were used to measure this signal, the measured voltage would be 100.045 volts and the resulting error would be negligible. At NBS three different steps are taken to lessen the effects of harmonics. The first is to try to minimize the harmonic content of the power supply. The supply used for most of the calibrations has a total harmonic distortion of order 0.2% of the fundamental. Second, a tuned detector is used to assure that the balance conditions are for the fundamental component of the voltage waveform. And third, all voltage measurements are made with true-rms voltmeters.

Voltage Dependence of Standard Capacitor

An additional measurement concern is the voltage coefficient of the high-voltage standard capacitor shown in figure 5. Although no absolute measurements are required to calibrate a voltage transformer, the ratio of the two standard capacitors must be known. The problem is that the low-voltage standard capacitor typically has a maximum voltage rating of 500 volts, and both the primary of the transformer and the high-voltage standard capacitor might be energized to 100 kV. Since the capacitor ratio measurement must be done at less than 500 volts, the voltage dependence of the high-voltage capacitor is important. This problem was discussed in Section 3.2.

4 MEASUREMENT INSTRUMENTATION

The calibration of voltage transformers and high-voltage capacitors at NBS requires the combined use of standard capacitors and the current comparator bridge. Standard capacitors have been thoroughly discussed in the literature [5, 6, 9]. The care that must be taken with their use in these types of measurements has been discussed above. The current comparator bridge will be discussed in this section.

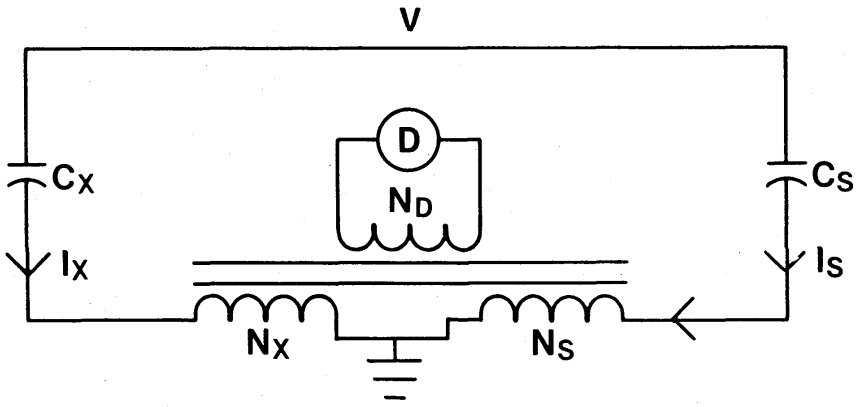

Figure 12. Basic current comparator bridge.

The current comparator bridge can be thought of as a voltage comparator transformer arm bridge in which the detector and power source have been interchanged. Traditionally, the disadvantage of the current comparator bridge versus the voltage comparator bridge is the signal-to-noise level. For high-voltage measurement applications, this is no longer a problem. Kusters and Petersons were the first to develop this bridge for the comparison of two capacitors at high voltage [3]. A basic current comparator bridge is shown in figure 12. The current in the unknown capacitor, C_x, is balanced against the current in the standard capacitor, C_s, by varying the turns ratios, N_s and N_x.

Balance is achieved when the signal at the detector, D, is equal to zero. At balance $I_x N_x = I_s N_s$ or:

$$V 2\pi f C_x N_x = V 2\pi f C_s N_s \tag{9}$$

where f is the frequency. This balance equation can also be expressed as:

$$C_x = \frac{N_s}{N_x} C_s. \tag{10}$$

The bridge shown in figure 12 has no means of balancing the in-phase current resulting from a non-ideal unknown capacitor, C_x. The current comparator in figure 13 does have the capability of balancing both the in-phase and quadrature components of the capacitive current. The difficulty with the approach used in figure 13 is that the applied high voltage is across the variable resistance R_s. It is nearly impossible to design a stable high-voltage variable resistor with negligible phase defect. Another means is necessary to balance the in-phase current, preferably at low voltage using well-characterized components.

The current comparator shown in figure 14 provides a satisfactory means of achieving both the in-phase and quadrature current balances. The quadrature current balance is identical to that in figures 12 and 13 above. The in-phase current balance is accomplished at low voltage with the aid of an operational amplifier. The current from the standard capacitor after passing through the N_s winding goes to the inverting input of the operational amplifier. This point is at virtual ground so the capacitive current balance, eq (10), is not affected. The feedback capacitor, C_f, causes the output voltage of the operational amplifier to be a small fraction (C_s/C_f where $C_f$is approximately 10 μF) of the applied voltage and π radians out of phase with it. The inductive voltage divider allows a known fraction, α, of this output signal to be applied across a standard resistor, R. As can be seen from figure 14, the signal is first inverted before the resistor in order to have the correct phase relationship with the unknown in-phase current. It is necessary that the non-inverted signal be

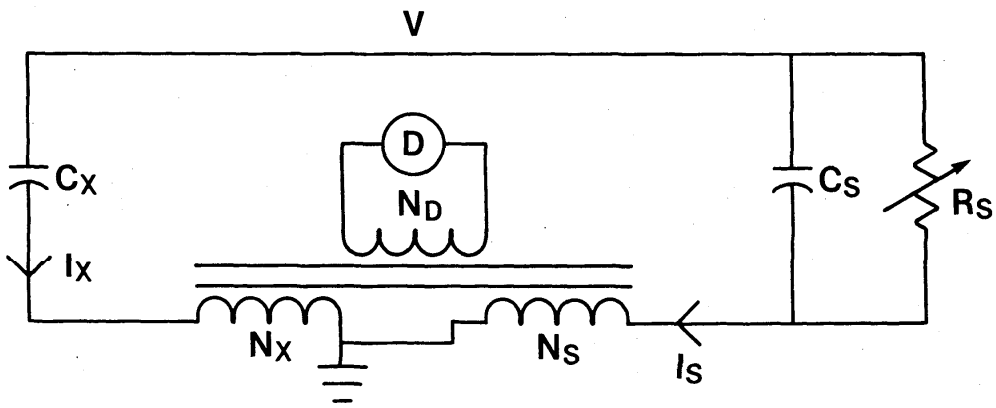

Figure 13. Current comparator bridge with high-voltage resistor for in-phase current balance.

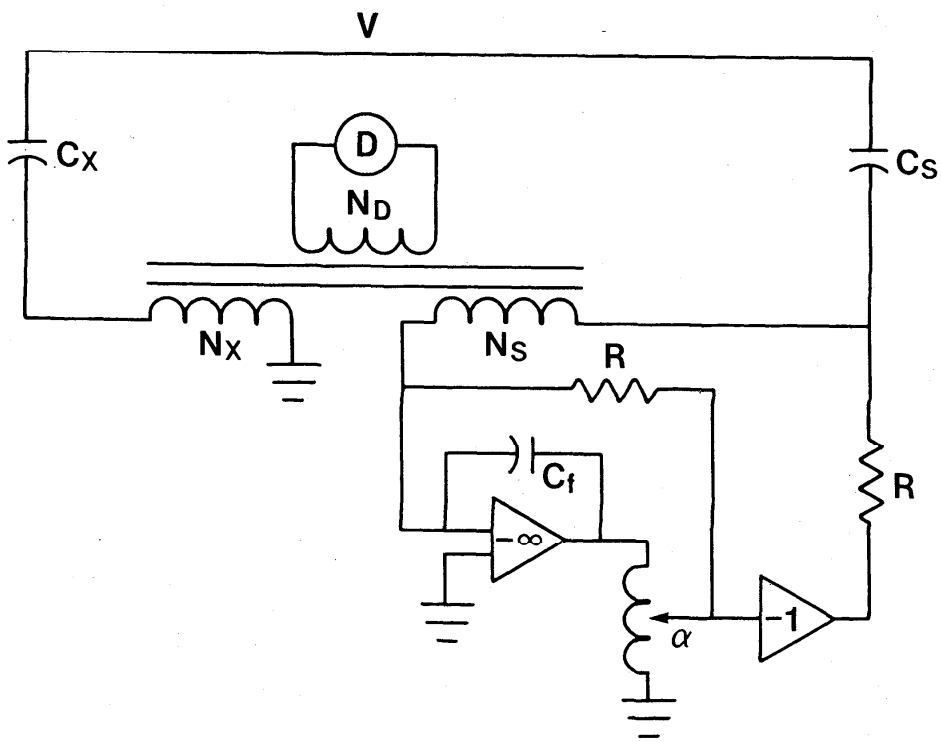

Figure 14. Current comparator with superior in-phase current balance.

applied to an identical standard resistor as shown in figure 14 so that the current from the standard winding, N_s, reaching the operational amplifier has no phase defect. The in-phase current into the standard winding, N_s, is then equal to:

$$I_{in} = \left(\frac{\alpha V C_s}{C_f}\right)/R. \tag{11}$$

Since the quadrature current $I_{out} = V 2\pi f C_s$, the dissipation factor is:

$$DF = \frac{I_{in}}{I_{out}} = \frac{\alpha V C_s}{2\pi f R V C_f C_s} \tag{12}$$

or

$$DF = \frac{\alpha}{2\pi f R C_f} \tag{13}$$

The resistor, R, can be chosen so that α is direct reading in percent or milliradians.

In some cases, particularly for larger capacitors, it is necessary to make a four-terminal measurement. This is required when the lead and winding impedances become a significant fraction of the impedance to be measured. Figure 15 shows a current comparator bridge with this capability. Because of the non-negligible lead and winding impedance, there is some voltage, e, at the low-voltage terminal of the capacitor. This voltage signal is inverted as shown in figure 15 and connected to the N_s winding through a capacitor, $C_{s'}$. The current through the unknown capacitor is:

$$I_x = j2\pi f(V - e)C_x \tag{14}$$

The current reaching the N_s winding is:

$$I_s = j2\pi f V C_s - j2\pi f e C_{s'}. \tag{15}$$

If $C_{s'}$ is adjusted prior to the measurement to be equal to C_s then eq (15) reduces to:

$$I_s = j2\pi f(V - e)C_s. \tag{16}$$

Comparing this with eq (14), the effect of the compensation circuit has been to place the same voltage across both the standard and unknown capacitors. This is exactly what is required for lead compensation.

Figure 16 shows the last enhancement of the bridge to be discussed. The National Bureau of Standards' current comparator bridge has an internal range of 1000:1 (i.e., the maximum value of N_d/N_x is 1000). The external current transformer shown in figure 16, referred to as a range extender, increases the measurement range by a factor of 1000 allowing the comparison of two currents differing in magnitude by as much as a factor of a million. As with the transformers internal to the current comparator bridge, the accuracy requirements on the range extender are quite stringent. Further details on the design of a ppm current comparator and the specifics of NBS' current comparator bridge are available in the literature [10, 11].

The current comparator bridge is quite straightforward to use and has proven to be rugged in practice. In order to monitor the behavior of NBS' current comparator bridge, a check standard is maintained. In this case, the check standard consists of two high quality standard capacitors. The ratio of the two capacitors is measured quarterly. For the last seven years, this ratio has been stable to within 20 ppm as can be seen in table 4.

The drift can readily be attributed to the two capacitors. The 9 ppm change between 10/84 and 4/85 occurred apparently after one of the capacitors had been used for another purpose. An independent measurement of that capacitor verified the change. While the use of this check standard cannot

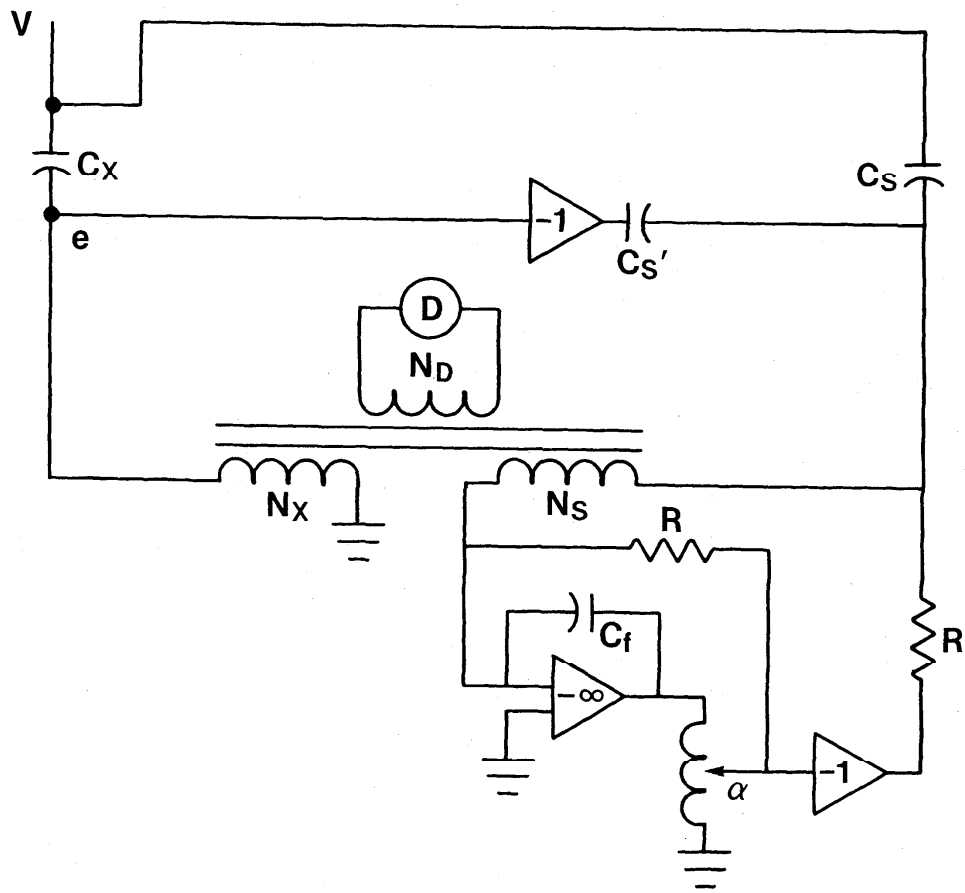

Figure 15. Current comparator bridge modified for 4-terminal capacitance measurements.

Table 4. Check Standard History

Date	Capacitance Ratio	Date	Capacitance Ratio
6/80	1.000025	1/84	1.000032
6/81	1.000028	5/84	1.000033
9/81	1.000027	10/84	1.000032
1/82	1.000027	4/85	1.000041
4/82	1.000026	6/85	1.000042
7/82	1.000026	10/85	1.000041
9/82	1.000028	12/85	1.000042
1/83	1.000030	1/86	1.000041
3/83	1.000031	5/86	1.000044
6/83	1.000033	7/86	1.000044
8/83	1.000031	10/86	1.000044
12/83	1.000031	2/87	1.000044

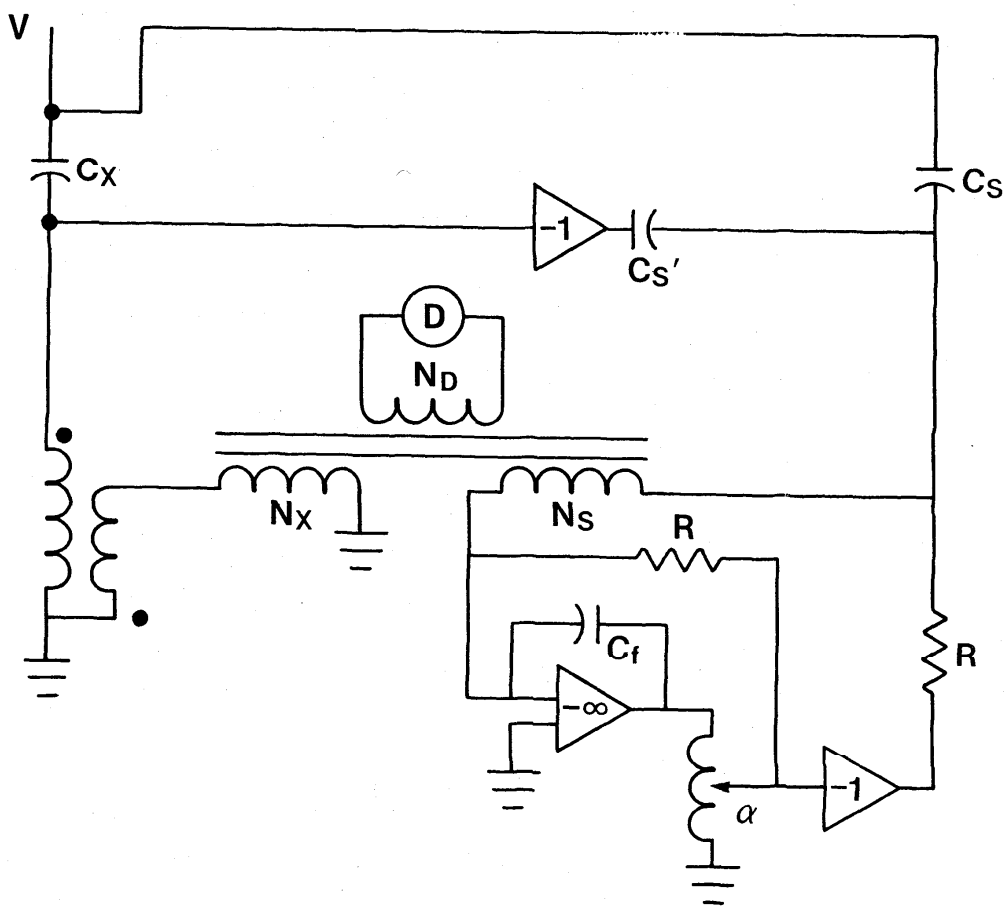

Figure 16. Current comparator bridge with external range extender.

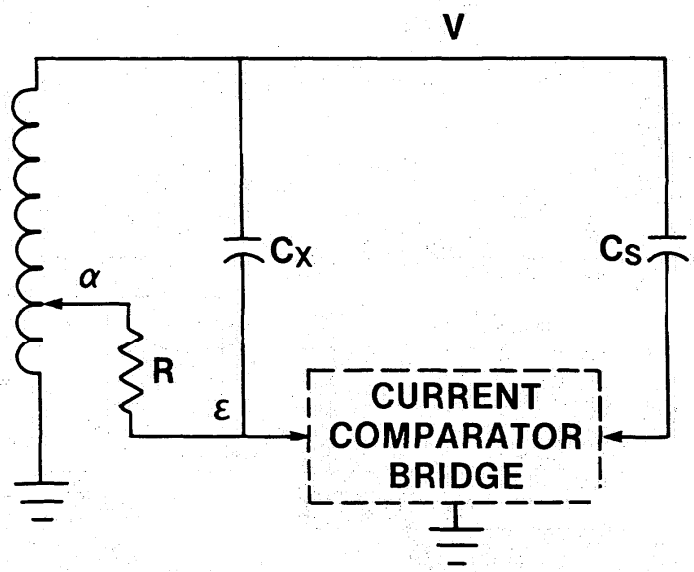

Figure 17. Circuit for checking operation of dissipation factor measurement of current comp :ator bridge.

prove that the bridge is still working to the ppm level, it can alert the user of changes large enough to affect calibration results. Of course, since the two capacitive currents are largely balanced using stable passive components (i.e., transformer windings), one expects that the bridge should be stable. It should be noted that if a transformer winding were to become open or short circuited the result would be dramatic and readily observed by the operator.

The situation with the dissipation factor (or in-phase current) balance is different as active components play an important role. Also, it is difficult to design a stable dissipation factor standard to act as a check standard. This problem has been overcome by using the circuit in figure 17. Standard capacitors are connected to the standard and unknown sides of the bridge. The known in-phase current is applied with the use of the inductive voltage divider and a resistor as shown. The advantage of this circuit is that the voltage across the resistor is small (~ 0.3 volt). However, because of the small voltage, any error voltage, ε, at the low side of the resistor, R, becomes important. The in-phase current entering the N_x winding is:

$$I_{in} = \frac{\alpha V - \varepsilon}{R} \tag{17}$$

where α is the ratio of the inductive voltage divider ($\alpha \ll 1$). The dissipation factor I_{in}/I_{out} is then equal to:

$$DF = \left[\frac{\alpha V - \varepsilon}{(V - \varepsilon) R 2\pi f C_x}\right]. \tag{18}$$

The effect of ε can be significant at the ppm level and needs to be eliminated. The circuit in figure 18 is identical to that in figure 17 except that the input of the inductive voltage divider is grounded. The dissipation factor in this case is then:

$$DF_o = \left[\frac{-\varepsilon}{(V - \varepsilon) R 2\pi f C_x}\right]. \tag{19}$$

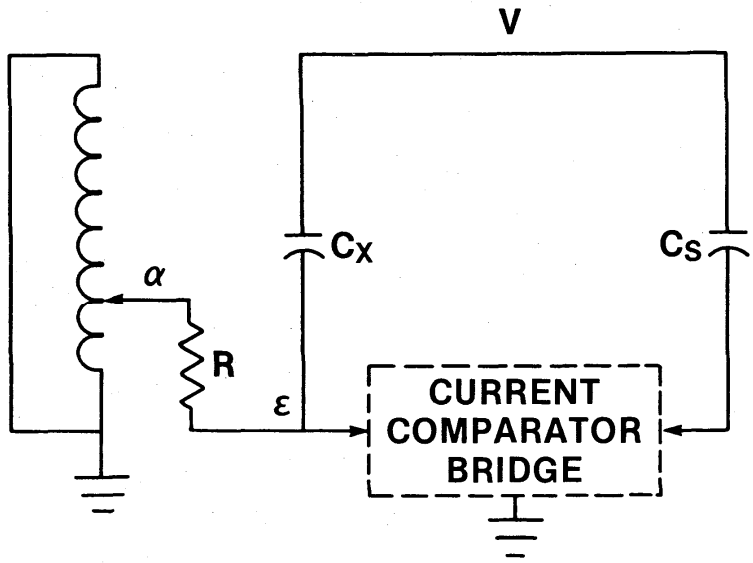

Figure 18. Circuit for checking operation of dissipation factor measurement of current comparator bridge. Input is grounded in order to measure ε in eq (18).

Since $\varepsilon \ll V$ subtracting eq (19) from eq (18) one obtains:

$$DF_m = DF - DF_o = \frac{\alpha}{2\pi f R C_x}. \tag{20}$$

At NBS typical values of α are 0.003, 0.0003, -0.0003, -0.003. With a one-megohm resistor and a 1000-pF standard capacitor this enables a near full scale test of the dissipation factor on its four ranges. Recent results are shown in table 5. The dissipation factor values are all in units of percent.

Agreement between the calculated values in eq (20) and the corrected measurement DF_m (the last two columns) are well within $\pm 0.1\,\%$ of the measured value. This check is performed at approximately six-month intervals.

It is further proposed that an additional check standard be obtained and measured quarterly. Specifically, a voltage transformer measured regularly at a ratio of 10:1 would give an additional check on the phase angle circuitry and on the bridge windings at something other than a 1:1 ratio.

5 MEASUREMENT UNCERTAINTIES

5.1 Voltage Transformers

The records of the National Bureau of Standards show examples of voltage transformers that have been calibrated at five-year intervals over a period of thirty to forty years. Invariably the original uncertainty statement covers any variation in ratio correction factor and phase angle observed over this period of time. Voltage transformers are often used by the customer in conjunction with other equipment to measure some quantity. For example, used with a current transformer and watthour meter, a voltage transformer can help provide a measure of the energy consumed by a large power

Table 5. Dissipation Factor Check Standard

Date	α	Measured (DF)	Correction (DF_o)	Corrected (DF_m)	Theoretical ($\alpha/2\pi fRC_x$)
7/82	0.0003	0.08003	0.0002	0.07983	0.07977
	0.003	0.7982	0.0002	0.7980	0.7977
	−0.003	−0.7979	0.0002	−0.7981	−0.7977
	−0.0003	−0.07959	0.0002	−0.07979	−0.07977
3/83	0.0003	0.08135	−0.00014	0.08149	0.08147
	0.003	0.81455	−0.00015	0.8147	0.8147
	−0.003	−0.81475	−0.00015	−0.8146	−0.8147
	−0.0003	−0.08160	−0.00014	−0.08146	−0.08147
10/83	0.0003	0.07952	−0.0001	0.07962	0.07959
	0.003	0.7959	−0.0001	0.7960	0.7959
	−0.003	−0.7960	−0.0001	−0.7959	−0.7959
	−0.0003	−0.07965	−0.0001	−0.07955	−0.07959
1/84	0.0003	0.08174	0.00029	0.08145	0.08143
	0.003	0.8148	0.00029	0.8145	0.8143
	−0.003	−0.8140	0.00029	−0.8143	−0.8143
	−0.0003	−0.08110	0.00029	−0.08139	−0.08143
5/84	0.0003	0.08090	0.0002	0.08070	0.08071
	0.003	0.8076	0.0002	0.8074	0.8071
	−0.003	−0.8071	0.0002	−0.8073	−0.8071
	−0.0003	−0.08050	0.0002	−0.08070	−0.08071
11/84	0.0003	0.08000	0.0000	0.08000	0.07997
	0.003	0.8000	0.0000	0.8000	0.7997
	−0.003	−0.8000	0.0000	−0.8000	−0.7997
	−0.0003	−0.08000	0.0000	−0.08000	−0.07997
4/85	0.0003	0.08060	0.0000	0.08060	0.08059
	0.003	0.8056	0.0000	0.8056	0.8059
	−0.003	−0.8055	0.0000	−0.8055	−0.8059
	−0.0003	−0.08050	0.0000	−0.08050	−0.08059
12/85	0.0003	0.08070	−0.0001	0.08080	0.08071
	0.003	0.8076	−0.0001	0.8077	0.8071
	−0.003	−0.8076	−0.0001	−0.8075	−0.8071
	−0.0003	−0.08070	−0.0001	−0.08060	−0.08071
11/86	0.0003	0.08029	−0.00022	0.08051	0.08046
	0.003	0.8049	−0.00022	0.8051	0.8046
	−0.003	−0.8054	−0.00022	−0.8052	−0.8046
	−0.0003	−0.08067	−0.00022	−0.08045	−0.08046

Table 6. Contributions to Uncertainty

	Uncertainties	
	Random	Systematic
Bridge measurement	±2 (±2)	±75 (±25)
Secondary voltage setting		±50 (±10)
Burden setting		±50 (±10)
Transformer self-heating		±75 (±20)
Capacitance ratio measurement	±2 (±2)	± 5 (± 5)

Table 7. Total Estimated Uncertainties

Ratio correction factor	±0.03 % (±0.01 %)
Phase Angle	±0.3 mrad (±0.1 mrad)

transformer. Thus it is important to the customers of this calibration service to obtain a meaningful uncertainty statement that reflects the contribution the voltage transformer would make to their total error budget.

As mentioned earlier in this report, voltage transformers calibrated at NBS generally fall into two accuracy classes: ±0.03 % uncertainty for ratio correction factor, ±0.3 mrad for phase angle; and ±0.01 % for ratio correction factor, ±0.1 mrad for phase angle. While it would be possible in some cases to report smaller uncertainties to the customers by more thorough determinations of such parameters as voltage coefficients, proximity effects, and burden dependencies, the present service provides an economical way to present meaningful error statements to the customers and meets their needs.

The analysis of the uncertainties for the ratio correction factor measurements are summarized in table 6. The units are in ppm. The values in parentheses apply to the higher accuracy voltage transformers described in Section 2.1 above. The uncertainties for the phase angle measurement of voltage transformers are the same as is shown in table 6 except the units are microradians instead of ppm.

To calculate the uncertainties reported to the customer, the systematic uncertainties tabulated above are algebraically summed and added to three times the root sum of squares of the random uncertainties. The results are shown in table 7.

The values in table 6 are approximate. Some transformers demonstrate stronger voltage dependences than others or stronger burden dependences. In some cases the values in table 7 must be adjusted for such transformers. The purpose of the above tables is to give the users an idea of the sources of errors and how they are used to calculate an uncertainty statement.

Since most of the sources of error presented in table 6 originate from the transformer under test, NBS could in principle measure a nearly ideal voltage transformer to much better accuracy than shown in table 7. Such a test would be expensive because of the time-consuming care that would be required.

5.2 Capacitors

The National Bureau of Standards has the capability to measure the ratio of two capacitors to an estimated systematic error of ±1 ppm and $\pm 1 \times 10^{-6} \pm 1\,\%$ of the measured value for the relative dissipation factor. The values of the standard capacitors used for these comparisons are known to

± 10 ppm for capacitance ($\pm 1 \times 10^{-6}$ for dissipation factor). The random error associated with the capacitance measurement is ± 1 ppm and $\pm 1 \times 10^{-6}$ for dissipation factor. Conservatively then, NBS could calibrate a customer's capacitor to an overall uncertainty of ± 15 ppm in capacitance and $\pm 5 \times 10^{-6} \pm 1\,\%$ of the value for dissipation factor. In general, the quoted uncertainty is always larger than this except for low-voltage standard capacitors similar to those used at the National Bureau of Standards. (Low-voltage standard capacitors are in general calibrated by the National Measurement Laboratory of NBS. The service described here provides higher voltage calibration of these same capacitors).

The uncertainty statements for high-voltage standard capacitors and power-factor capacitors depend on the stability of these devices during the course of the NBS' measurements. The stability is influenced by both the voltage dependence of the device and self-heating (i.e., the capacitance and dissipation factors vary as the internal energy dissipated heats the device). Self-heating effects are more important for power-factor capacitors. Some power-factor capacitors demonstrate significant hysteresis effects. Assigning an uncertainty statement to these measurements depends on the specific behavior of the capacitor. If self-heating is a problem the calibration report clearly must specify the amount of time the capacitor was energized before the measurement was made. If hysteresis effects are detected they are so noted. Because of the nature of most of these devices, the calibration reports for capacitors usually include a statement of the form: "the estimated uncertainties quoted apply to the above tabulated values and should not be construed as being indicative of the long-term stability of the device under test." This statement is also important for the compressed gas insulated capacitors whose values might change significantly by handling during shipping.

The actual uncertainty quoted to the customer is derived by algebraically summing the systematic uncertainties and adding three times the root mean sum of squares of the random uncertainties. For the capacitance measurement of compressed gas insulated capacitors, the measurement uncertainty will include a 20 ppm contribution because of the possible one kelvin variation in temperature of the NBS voltage transformer laboratory. For power-factor capacitors the self-heating variations will dominate ambient temperature effects.

6 ACKNOWLEDGMENTS

The author would like to thank Oskars Petersons, Chief of the Electrosystems Division, who has been the source of nearly all the author's knowledge on the calibration of voltage transformers and capacitors. The author would also like to acknowledge the work of Barbara Frey and Roberta Cummings who helped prepare this manuscript. Lastly, but certainly not least, the author would like to acknowledge both the "old-timers" here at the National Bureau of Standards, who began the tradition of excellence in measurements, and the present calibration staff who are attempting to carry on this tradition under vastly different constraints.

7 REPORT FORMAT

Examples of the calibration report format are shown on the next pages for both the voltage transformer and high-voltage capacitor calibration service. These formats are frequently modified in order to deal with special circumstances pertaining to a particular calibration.

U.S. DEPARTMENT OF COMMERCE
NATIONAL BUREAU OF STANDARDS
GAITHERSBURG, MD 20899

REPORT OF CALIBRATION

VOLTAGE TRANSFORMER
120-14,400 to 120 Volts, 60 Hertz, 4.4 Volt-Amperes
XXXXX, Serial No. ???????

Submitted by

Customer Name
Customer Address

Frequency (hertz)	Secondary Burden	Secondary Voltage (volts)	Voltage Ratio	Phase Angle (milliradian)
60	A	120	1 x 1.00001	-0.12
	B		1.00051	-0.16

Date of Test: February 29, 1987
Temperature: 20 °C

The phase angle is positive when the secondary voltage leads the primary voltage of the same polarity. The characteristics of the burdens designated above are given in the following table:

Burden	Impedance (ohms)	Power Factor
A	1×10^4	1.00
B	576	1.00

Estimated Uncertainties

Voltage Ratio: ±0.01 %
Phase Angle: ±0.1 mrad
Temperature: ±1 °C

The results given in this report apply to the fundamental frequency components of the voltages.

For the Director
National Engineering Laboratory

Group Leader
Applied Electrical Measurements
Electrosystems Division

U.S. DEPARTMENT OF COMMERCE
NATIONAL BUREAU OF STANDARDS
GAITHERSBURG, MD 20899

REPORT OF CALIBRATION

STANDARD CAPACITOR
XXXXX, Serial No. ???????

Submitted by

Customer Name
Customer Address

Capacitance and dissipation factor were measured on February 29, 1987, at a frequency of 60 Hz. The results are tabulated below.

Voltage (kilovolts-rms)	Capacitance (picofarads)
2.5	1000.98
5	1000.98
10	1000.98

Ambient Temperature: 21.5 °C

The dissipation factor was measured to be less than 5×10^{-6}.

Estimated Uncertainties

Capacitance: ±0.05 pF
Dissipation Factor: $\pm 5 \times 10^{-6}$
Temperature: ±1 °C

The estimated uncertainties quoted apply to the above tabulated values and should not be construed as being indicative of the long-term stability of the device under test.

For the Director
National Engineering Laboratory

Group Leader
Applied Electrical Measurements
Electrosystems Division

APPENDIX

The voltage transformer will be represented as an ideal transformer with some unknown series output impedance, Z_o, as shown in figure 9. The model has been shown to be sufficiently accurate experimentally. The relationship between the input voltage, E_i, and the output voltage with zero burden, E_o, is:

$$\frac{E_i}{E_o} = N\mathrm{RCF}_o e^{-j\Gamma_o} = \left|\frac{E_i}{E_o}\right| e^{-j\Gamma_o} \tag{21}$$

where N is the nominal (or turns) ratio of the transformer, RCF_o is the ratio-correction factor ($N \times \mathrm{RCF}_o$ = actual ratio) at zero burden, Γ_o is the angle by which the secondary voltage vector leads the primary voltage vector and $j = \sqrt{-1}$. A similar relationship exists between the input voltage, E_i, and the output voltage E_c, with secondary burden C (having impedance Z_c) shown in figure 10:

$$\frac{E_i}{E_c} = N\mathrm{RCF}_c e^{-j\Gamma_c} \tag{22}$$

where RCF_c is the ratio correction factor with secondary burden C and Γ_c is the corresponding phase angle.

Equating the current through Z_o and Z_c in figure 10, one obtains

$$\frac{E_o - E_c}{Z_o} = \frac{E_c}{Z_c} \tag{23}$$

or

$$E_c = \frac{E_o Z_c}{Z_o + Z_c}. \tag{24}$$

This can be rewritten in the following form:

$$\frac{E_i}{E_c} = \frac{E_i}{E_o}\left(1 + \frac{Z_o}{Z_c}\right). \tag{25}$$

Setting Z_o equal to $R_o + jX_o$ and Z_c equal to $R_c + jX_c$, eq (25) becomes:

$$\frac{E_i}{E_c} = \frac{E_i}{E_o}\left[1 + \frac{R_o + jX_o}{R_c + jX_c}\right]. \tag{26}$$

Taking the absolute value of both sides of eq (26), one finds that:

$$\left|\frac{E_i}{E_c}\right| \approx \left|\frac{E_i}{E_o}\right|\left[1 + \frac{R_oR_c + X_oX_c}{R_c^2 + X_c^2}\right], \tag{27}$$

where it has been assumed that both R_o and X_o are much less than Z_c so that terms of order $[(R_oR_c + X_oX_c)/(R_c^2 + X_c^2)]^2$ and higher have been neglected. Using eq (21) and (26), one obtains

$$\frac{E_i}{E_c} = \left|\frac{E_i}{E_o}\right| e^{-j\Gamma_o}\left[1 + \frac{R_o + jX_o}{R_c + jX_c}\right] \tag{28}$$

or

$$\frac{E_i}{E_c} = \left|\frac{E_i}{E_o}\right| e^{-j\Gamma_o}\left[1 + \frac{(R_o + jX_o)(R_c - jX_c)}{R_c^2 + X_c^2}\right] \tag{29}$$

This can also be expressed as

$$\left|\frac{E_i}{E_c}\right| e^{-j\Gamma_c} = \left|\frac{E_i}{E_o}\right| e^{-j\Gamma_o}[\cdots]. \tag{30}$$

Both exponentials have arguments much less than one so that discarding quadratic and higher order terms and equating the imaginary components of the left and right sides of eq (30) one obtains

$$\left|\frac{E_i}{E_c}\right|\Gamma_c \approx \left|\frac{E_i}{E_o}\right|\left[\Gamma_o + \frac{X_c R_o - X_o R_c}{R_c^2 + X_c^2}\right] \tag{31}$$

or from eq (25) assuming $Z_o \ll Z_c$

$$\Gamma_c \approx \Gamma_o - \frac{X_o R_c - X_c R_o}{R_c^2 + X_c^2}. \tag{32}$$

The resistive and reactive components of the burden C can be expressed as

$$R_c = \sqrt{R_c^2 + X_c^2}\cos\theta_c \tag{33}$$

and

$$X_c = \sqrt{R_c^2 + X_c^2}\sin\theta_c \tag{34}$$

where $\cos\theta_c$ is the power factor of the burden C. From eqs (21) and (22)

$$\left|\frac{E_i}{E_o}\right| = N\mathrm{RCF}_o \tag{35}$$

and

$$\left|\frac{E_i}{E_c}\right| = N\mathrm{RCF}_c. \tag{36}$$

Using eqs (27) and (33)–(36) one obtains

$$\mathrm{RCF}_c = RCF_o\left[1 + \frac{1}{|Z_c|}(R_o\cos\theta_c + X_o\sin\theta_c)\right]. \tag{37}$$

For the purposes of this discussion, it will be assumed that burden C (having impedance Z_c) above is the burden for which the ratio correction factor and phase angle are to be calculated. The ratio-correction factor and phase angle must be known for some other burden, T, which shall be designated as having impedance, Z_t. Using eq (25) and substituting burden T for burden C:

$$Z_o = \left[\frac{E_i/E_t}{E_i/E_o} - 1\right]Z_t. \tag{38}$$

or using eq (22)

$$Z_o = Z_t[\mathrm{RCF}_t e^{-j\{\Gamma_t - \Gamma_o\}} - \mathrm{RCF}_o]/\mathrm{RCF}_o. \tag{39}$$

Neglecting second order and higher terms

$$Z_o \approx Z_t[\mathrm{RCF}_t - \mathrm{RCF}_o + j(\Gamma_o - \Gamma_t)]/\mathrm{RCF}_o. \tag{40}$$

Using the facts that

$$Z_t = |Z_t|(\cos\theta_t + j\sin\theta_t) \tag{41}$$

and

$$Z_o = R_o + jX_o \tag{42}$$

one finds

$$R_o \approx \left(\frac{|Z_t|}{\mathrm{RCF}_o}\right)[(\mathrm{RCF}_t - \mathrm{RCF}_o)\cos\theta_t + (\Gamma_t - \Gamma_o)\sin\theta_t] \tag{43}$$

and

$$X_o \approx \left(\frac{|Z_t|}{\mathrm{RCF}_o}\right)[(\Gamma_o - \Gamma_t)\cos\theta_t + (\mathrm{RCF}_t - \mathrm{RCF}_o)\sin\theta_t]. \tag{44}$$

Using eqs (37), (43), and (44) and the relations:

$$\cos\theta_c \cos\theta_t + \sin\theta_c \sin\theta_t = \cos(\theta_t - \theta_c) \tag{45}$$

$$\cos\theta_c \sin\theta_t - \sin\theta_c \cos\theta_t = \sin(\theta_t - \theta_c) \tag{46}$$

one finds

$$\mathrm{RCF}_c \approx \mathrm{RCF}_o + \left(\frac{B_c}{B_t \mathrm{RCF}_o}\right)[(\mathrm{RCF}_t - \mathrm{RCF}_o)\cos(\theta_t - \theta_c) + (\Gamma_t - \Gamma_o)\sin(\theta_t - \theta_c)] \tag{47}$$

or

$$\mathrm{RCF}_c \approx \mathrm{RCF}_o + \left(\frac{B_c}{B_t}\right)[(\mathrm{RCF}_t - \mathrm{RCF}_o)\cos(\theta_t - \theta_c) + (\Gamma_t - \Gamma_o)\sin(\theta_t - \theta_c)] \tag{48}$$

where $B_c = 1/Z_c$ is the burden in ohms^{-1} of the impedance Z_c. Since the second term in eq (47) represents a small correction to the first and since RCF_o is approximately equal to one, RCF_o has been dropped from the second term of eq (48). Using eqs (32)–(34)

$$\Gamma_c \approx \Gamma_o - \frac{1}{|Z_c|}(X_o \cos\theta_c - R_o \sin\theta_c) \tag{49}$$

Using eqs (43)–(46) and (49)

$$\Gamma_c \approx \Gamma_o + \left(\frac{B_c}{B_t \mathrm{RCF}_o}\right)[(\Gamma_t - \Gamma_o)\cos(\theta_t - \theta_c) - (\mathrm{RCF}_t - \mathrm{RCF}_o)\sin(\theta_t - \theta_c)] \tag{50}$$

or

$$\Gamma_c \approx \Gamma_o + \left(\frac{B_c}{B_t}\right)[(\Gamma_t - \Gamma_o)\cos(\theta_t - \theta_c) - (\mathrm{RCF}_t - \mathrm{RCF}_o)\sin(\theta_t - \theta_c)] \tag{51}$$

since RCF_o is approximately equal to one.

The relations eqs (48) and (51) can be used to calculate the RCF and phase angle for some secondary burden, C, if the ratio correction factors and phase angles are known at some other burden, T, and at zero burden.

REFERENCES

[1] F. K. Harris, *Electrical Measurements*, John Wiley & Sons, New York, pp. 576-577 (1966).

[2] F. K. Harris, *Electrical Measurements*, John Wiley & Sons, New York, pp. 687-738 (1966).

[3] N. L. Kusters and O. Petersons, "A Transformer-Ratio-Arm Bridge for High-Voltage Capacitance Measurements," IEEE Trans. Commun. Electron., vol. CE-82, pp. 606-611, Nov. 1963.

[4] M. C. McGregor, J. F. Hersh, R. D. Cutkosky, F. K. Harris, and F. R. Kotter, "New Apparatus at the National Bureau of Standards for Absolute Capacitance Measurement," IRE Trans. on Instrum., vol. I-7, no. 3 & 4, Dec. 1958.

[5] D. L. Hillhouse and A. E. Peterson, "A 300-kV Compressed Gas Standard Capacitor with Negligible Voltage Dependence," vol. IM-22, pp. 406-416, December 1973.

[6] W. E. Anderson, R. S. Davis, O. Petersons, and W. J. M. Moore, "An International Comparison of High Voltage Capacitor Calibrations," IEEE Trans. Power Appar. Syst., vol. PAS-97, no. 4, pp. 1217-1223, July 1973.

[7] *IEEE Standard Requirements for Instrument Transformers*, American National Standards Institute, ANSI/IEEE C57.13-1978, pp. 32, 1978.

[8] *IEEE Standard Requirements for Instrument Transformers*, American National Standards Institute, ANSI/IEEE C57.13-1978, pp. 45, 46, 1978.

[9] *F. K. Harris, Electrical Measurements*, John Wiley & Sons, New York, pp. 673-687 (1966).

[10] O. Petersons and W. E. Anderson, "A Wide-Range High-Voltage Capacitance Bridge with One PPM Accuracy," IEEE Trans. Instrum. Meas., vol. IM-24, no. 4, December 1975.

[11] O. Petersons, *A Wide-Range High-Voltage Capacitance Bridge with One PPM Accuracy*, D. Sc. dissertation, School of Engineering and Applied Sciences, George Washington University, Washington, DC, February 1974.