NBS Measurement Services:

GOES Satellite Time Code Dissemination: Description and Operation

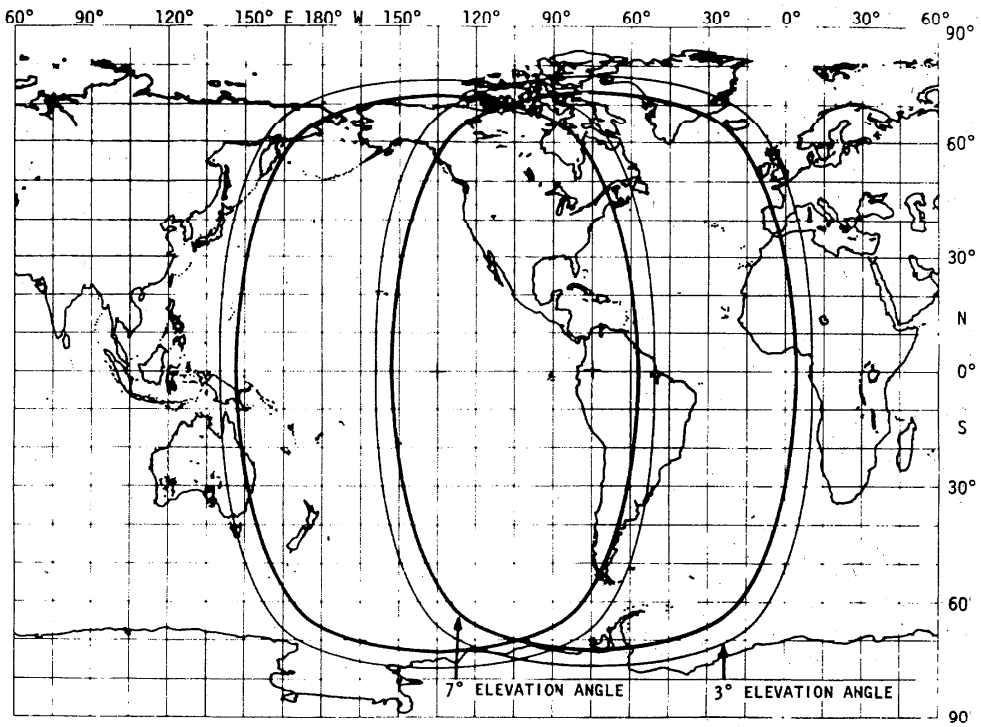

NBS Special Publication 250-30

Roger E. Beehler
Dick Davis
John B. Milton

U.S. Department of Commerce
National Bureau of Standards

NBS MEASUREMENT SERVICES:
GOES Satellite Time Code Dissemination: Description and Operation

Roger E. Beehler, Dick Davis, and John B. Milton

Time and Frequency Division
Center for Basic Standards
National Measurement Laboratory
National Bureau of Standards
Boulder CO 80303

January 1988

U.S. DEPARTMENT OF COMMERCE, C. William Verity, Secretary
NATIONAL BUREAU OF STANDARDS, Ernest Ambler, Director

Library of Congress Catalog Card Number: 87–619906

National Bureau of Standards Special Publication 250-30
Natl. Bur. Stand. (U.S.), Spec. Publ. 250-30, 49 pages (Jan. 1988)
CODEN: XNBSAV

U.S. GOVERNMENT PRINTING OFFICE
WASHINGTON: 1988

For sale by the Superintendent of Documents, U.S. Government Printing Office, Washington, DC 20402–9325

PREFACE

Calibrations and related measurement services of the National Bureau of Standards provide the means for makers and users of measuring tools to achieve levels of measurement accuracy that are necessary to attain quality, productivity and competitiveness. These requirements include the highest levels of accuracy that are possible on the basis of the most modern advances in science and technology as well as the levels of accuracy that are necessary in the routine production of goods and services. More than 300 different calibrations, measurement assurance services and special tests are available from NBS to support the activities of public and private organizations. These services enable users to link their measurements to the reference standards maintained by NBS and, thereby, to the measurement systems of other countries throughout the world. NBS Special Publication 250, NBS Calibration Services Users Guide, describes the calibrations and related services that are offered, provides essential information for placing orders for these services and identifies expert persons to be contacted for technical assistance.

NBS Special Publication 250 has recently been expanded by the addition of supplementary publications that provide detailed technical descriptions of specific NBS calibration services and, together with the NBS Calibration Services Users Guide, they constitute a topical series. Each technical supplement on a particular calibration service includes:

- specifications for the service
- design philosophy and theory
- description of the NBS measurement system
- NBS operational procedures
- measurement uncertainty assessment

  error budget
  systematic error
  random errors

- NBS internal quality control procedures

The new publications will present more technical detail than the information that can be included in NBS Reports of Calibration. In general they will also provide more detail than past publications in the scientific and technical literature; such publications, when they exist, tend to focus upon a particular element of the topic and related elements may have been published in different places at different times. The new series will integrate the description of NBS calibration technologies in a form that is more readily accessible and more useful to the technical user.

The present publication, SP 250-30, NBS Measurement Services: GOES Satellite Time Code Dissemination: Description and Operation, by Beehler, Davis, and Milton, is one of approximately 20 documents in the new series published or in preparation by the Center for Basic Standards. It describes calibration technology and procedures utilized in connection with NBS Service Identification Numbers from 53110 to 53150 listed in the NBS Calibration Services Users Guide. Inquiries concerning the contents of these documents may be directed to the author or to one of the technical contact persons identified in the Users Guide (SP-250).

Suggestions for improving the effectiveness and usefulness of the new series would be very much appreciated at NBS. Likewise, suggestions concerning the need for new calibration services, special tests and measurement assurance programs are always welcome.

Joe Simmons, Acting Chief
Office of Physical Measurement Services

Helmut Hellwig, Acting Director
Center for Basic Standards

GOES SATELLITE TIME CODE DISSEMINATION:
DESCRIPTION AND OPERATION

This document describes the GOES (Geostationary Operational Environmental Satellite) satellite time code dissemination system operated by NBS to provide time and frequency users with an NBS traceable reference signal for calibration and general timekeeping applications. The discussion includes the various subsystems to generate, monitor, and verify the timing signals located at NBS/Boulder, NOAA/Wallops Island, VA, NBS/Ft. Collins, CO, and several other dispersed sites. Some of the main operational procedures used in providing a close approximation to UTC(NBS) at any user's location in the Western hemisphere are described, along with an analysis of the uncertainties associated with the GOES time code generation, transmission through the satellite path, and reception at the user's site. Techniques and facilities used to maintain internal quality control are also described.

Key words: calibration; frequency; GOES satellites; satellite; standards; time; time code; time dissemination

CONTENTS

Page

1. DESCRIPTION OF SERVICE ---------- 1.1
   A. Introduction ---------- 1.1
   B. GOES Time Code System ---------- 1.1
   C. Recent Improvements to the GOES System ---------- 1.4

2. DESIGN PHILOSOPHY ---------- 2.1
   A. Intended Audience of User and Performance Levels ------ 2.1
   B. Link to the NBS Primary Standards and Time Scales ----- 2.2
   C. Reliability and Performance Verification Aspects ------ 2.2
   D. Support for Time Code Users ---------- 2.3

3. DESCRIPTION OF SYSTEM ---------- 3.1
   A. Introduction ---------- 3.1
   B. Wallops Island, VA ---------- 3.1
   C. Space Segment ---------- 3.4
   D. NOAA Ground Facilities ---------- 3.4
   E. NBS/Boulder ---------- 3.5
   F. Ft. Collins, CO, Backup Facility ---------- 3.7
   G. Auxiliary Monitoring Sites in Washington, DC, and Kauai, HI ---------- 3.8

4. OPERATIONAL PROCEDURES ---------- 4.1
   1. Procedures for Updating the Satellite Position Data --- 4.1
      1.1 Generation of Updated Satellite Position Data -- 4.1
      1.2 Transfer of Satellite Position Data to Wallops Island ---------- 4.2

   2. Procedures for Verifying Wallops Island System Time and Frequency Performance and Making Related Adjustments 4.3
      2.1 Checking Performance of the Wallops Island Clock System ---------- 4.3
      2.2 Checking and Resetting Wallops Island System Date and Time ---------- 4.3
      2.3 Verifying and Resetting the Wallops Island Clock Rate Words ---------- 4.3

   3. Procedures for Updating and Verifying Other Information in the Wallops Island System ---------- 4.4

   4. Monitoring Operations at NBS/Boulder ---------- 4.5
      4.1 Verification of Current Time Code Performance -- 4.5
      4.2 Archiving and Retrieving Past Time Code Performance Data ---------- 4.6
      4.3 Initialization of the Data Logger Systems ------ 4.6

5. Monitoring Operations at Other Sites ---------- 4.6
5.1 U. S. Naval Observatory (USNO), Washington, DC - 4.6
5.2 NBS/Ft. Collins, CO, Site ---------- 4.7
5.3 NBS/Kauai, HI, Site ---------- 4.7

6. User Notification Procedures ---------- 4.8
6.1 NBS Time and Frequency Bulletin ---------- 4.8
6.2 GOES Status Reports in the USNO Automated Data Service System ---------- 4.8

5. ASSESSMENT OF UNCERTAINTIES ---------- 5.1
A. Introduction ---------- 5.1
B. Quoted Uncertainties ---------- 5.1
C. Discussion of Error Sources ---------- 5.2
1) Wallops Island Reference Errors ---------- 5.2
2) Equipment Delays at Wallops Island ---------- 5.2
3) Free-Space Propagation Delay ---------- 5.2
4) Transponder Delays ---------- 5.5
5) Ionospheric/Tropospheric Effects ---------- 5.5
6) Receiver Delays ---------- 5.5
7) Measurement Uncertainties ---------- 5.6
D. Summary of Performance-Monitoring Data ---------- 5.6

6. INTERNAL QUALITY CONTROL ---------- 6.1
A. Monitoring at Wallops Island for Internal Quality Control ---------- 6.1
B. Monitoring of Received GOES Signals Versus UTC(NBS) --- 6.2
C. Experience With the Internal Quality Control Mechanisms ---------- 6.3

7. FUTURE PROJECTIONS ---------- 7.1
A. Projections for the GOES Satellite System ---------- 7.1
B. Status of Formal NBS/NOAA Agreements ---------- 7.1
C. NOAA Satellite Tracking Operations ---------- 7.1
D. Potential for Improvements to the Time Code Performance ---------- 7.2

REFERENCES ---------- R.1

GOES SATELLITE TIME CODE DISSEMINATION: DESCRIPTION AND OPERATION

1. DESCRIPTION OF SERVICE

A. Introduction

In 1974 the National Bureau of Standards (NBS) began regular dissemination of an NBS-referenced time code via two geostationary GOES satellites (Geostationary Operational Environmental Satellites) operated by NOAA (National Oceanic and Atmospheric Administration). The primary mission of the GOES satellites and associated support systems is to gather a variety of environmental data from various sources, including large numbers of remotely located sensing platforms throughout the Western hemisphere, relay the information via the satellites to a central processing facility, and make the processed information available to the World Meteorological Organization and other interested users. The NBS time code is interleaved into the data collection platform interrogation channel, providing a continuously available accurate time-of-day reference both for internal NOAA data handling operations and for more general time and frequency applications throughout much of the Western hemisphere. Commercial time code receivers are readily available for a few thousand dollars that can provide received timing accuracies of better than 100 microseconds over averaging periods of hours, months, or years.

The cooperative NBS/NOAA program to provide and disseminate the NBS time code via the operational GOES satellites was formalized for a five-year period in May 1977 by an NBS/NOAA Memorandum-of-Agreement, which was extended by both organizations in May 1982 for an additional five-year period and again in August 1987 for an additional ten-year period. Since 1974, significant improvements have been made in the NBS time code generation and control equipment at the GOES Satellite Control Facility at Wallops Island, VA; the time code control and monitoring procedures used by NBS to assure overall system accuracy and reliability; and in the newer generations of the GOES satellites themselves.

B. GOES Time Code System

The GOES time code system consists of an NBS-owned time code generation, monitoring, and control system at NOAA's Wallops Island site; the satellite uplink facilities located at 75°W and 135°W longitude, respectively; monitoring, computing, and data storage facilities at NBS/Boulder and at NBS facilities in Ft. Collins, CO; two-way dial-up data communication links between Boulder/Ft. Collins and Wallops Island; and support operations such as NOAA's satellite tracking operations and additional monitoring facilities in Washington, DC and Hawaii. The triply redundant time-code-generation system is based on a set of cesium atomic standards. The time code used is specially designed for compatibility with the GOES Data Collection System and has been described in previous publications [1]. The code as transmitted via the two GOES satellites includes complete time-of-year information; the current year; DUT1 values -- i.e., estimates of the current difference between the UT1 astronomical time scale and UTC atomic time scale; satellite position

information for computing path delays; current accuracy indicators for both the East and West time codes; an invalid-position-data indicator; a daylight-saving-time indicator; a leap-second notification; and system status information. The NBS equipment at Wallops Island also includes capabilities for measuring and storing various time difference data, fault detection and alarm circuitry, provisions for monitoring Loran-C and GPS satellite transmissions as independent timing references, memory for storing 10 days worth of position prediction data for each of the two operational satellites, and modems for use with the Boulder-Wallops Island data link.

The time code is continuously transmitted from this system to the East and West GOES satellites at S-band and is then downlinked on two slightly different frequencies near 468 MHz in one of the meteorological satellite allocated bands. This constraint to use meteorological satellite frequency allocations for the GOES/East and GOES/West downlinks may result in interference in receiving the time code transmissions in some urban areas, since these allocations are shared with the very large and very active land-mobile service. Furthermore, the land-mobile use is designated as the "primary" one within the U.S. while the meteorological satellite use is "secondary." In practical terms this means that if interference to the time code is experienced from land-mobile transmissions, it must be tolerated. Fortunately, time code receivers can be designed to effectively ignore much of this type of interference when necessary. In general, the time code as received from GOES/East is less affected by interference than that from GOES/West because one of the land-mobile channels exactly coincides with the GOES/West frequency while the closest one to the GOES/East frequency is somewhat offset.

The satellite position information included in the time code format is generated from sophisticated orbit-prediction programs run on large computers at NBS/Boulder or at NOAA in the Washington, DC, area. Data inputs for this program include the satellite orbital elements which are determined from satellite tracking data obtained by NOAA and/or NASA. The computer program generates position predictions for each satellite for each hour during the next ten-day period and these are further processed by the microprocessor-based time code generation equipment at Wallops Island to generate updated values each minute that are then encoded along with the time information. Users then have the option to simply decode the received time information achieving accuracies of about 1 millisecond or to also use the position data to compute a path delay from Wallops Island to the user's location. The position data are updated each minute to compensate for movements of the satellites. In the latter case, timing accuracies of better than 100 microseconds can be achieved. GOES timing accuracy <u>as transmitted</u> from Wallops Island is maintained to within at least 10 microseconds by continuous monitoring relative to Loran-C and GPS satellite transmissions and by occasional portable clock trips.

Reception of the GOES time code is possible on a continuous basis throughout much of the Western hemisphere as shown by the coverage maps for both satellites in Figure 1. Overlapping coverage is provided within the continental U.S. and certain other areas. While there are also operational satellites in the European (METEOSAT) and Japanese (GMS) regions that are part

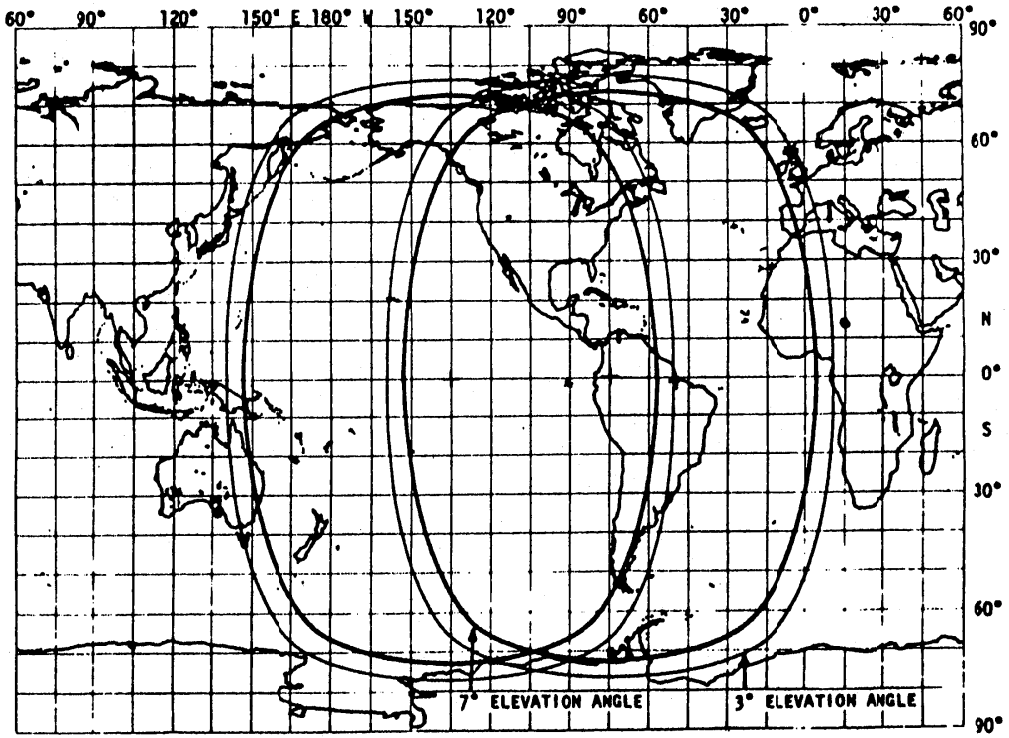

Figure 1. GOES/East and GOES/West coverage areas.

of the same worldwide meteorological satellite system as GOES, these satellites do not currently include an identical or similar time code in their broadcast formats. Several forms of commercial GOES time code receivers are currently available which feature automatic operation with small antennas. Prices range from about $3500 to $4500, depending on the accuracy level and receiver features provided.

C. Recent Improvements to the GOES System

As the GOES time code system and operational procedures have evolved during the past few years, several improvements have been incorporated. A second-generation system that provides increased reliability through triple redundancy, more elaborate diagnostic information available remotely to NBS/Boulder personnel, independent electrical power backup, and the replacement of rubidium standards with more stable (in long term) cesium devices has been installed at Wallops Island. The information transmitted to users has been expanded to include higher-resolution satellite position data, UT1 time scale information, daylight-saving-time indicators, leap-second notification, expected-accuracy indicators for each time code, the current year, and system status information. Monitoring has also been expanded by placing receivers at the U.S. Naval Observatory in Washington, DC, and at radio station WWVH in Hawaii to provide better geographical coverage and by acquiring dedicated backup receivers for the NBS/Boulder and Ft. Collins, CO, backup systems. GOES status information is now available to interested users via the monthly NBS Time and Frequency Bulletin [2] and, on a more current basis, from the USNO Automated Data Service. The USNO system can be accessed using a variety of terminals at either 300 or 1200 baud with even parity. Telephone access numbers are: (202) 653-1079 (commercial); 653-1079 (FTS); and 294-1079 (Autovon). After responding to the prompt asking for identification, the GOES status information is obtained by requesting the file "NBSGO" with the command "@NBSGO" followed by a carriage return. These status reports are designed to report interruptions in service, temporary perturbations in operations which result in reduced reception accuracies or other problems, and accomplished or projected changes that affect the GOES time code.

GOES SATELLITE TIME CODE DISSEMINATION:
DESCRIPTION AND OPERATION

2. DESIGN PHILOSOPHY

A. Intended Audience of User and Performance Levels

The GOES time code dissemination system was designed with the intent of providing continuously available, convenient-to-use timing signals for those users needing better accuracies, coverage, and reception reliability than are typically available from WWV, WWVH, and WWVB. This translates roughly into accuracy capabilities of better than 1 millisecond, coverage extending well beyond the U.S. mainland, and reliable reception 24 hours per day that is not subject to serious degradation due to ionospheric and atmospheric propagation variations.

A number of previous user surveys conducted by NBS have shown that the needs for time and frequency reference signals span a very wide range of accuracy requirements, specific types of information, geographical location, and measurement application. It is also clear that very large numbers of users and applications are involved. Since existing HF broadcast services such as those from radio stations WWV and CHU have traditionally been very successful in serving the large numbers of customers with relatively modest needs for accuracy, the GOES time code was developed from the beginning to provide relatively modest numbers of users who need timing accuracies in the 10-1000 microsecond range with continuous, reliable, and widely available timing signals suitable for use with automated, relatively inexpensive receiving equipment. Typical users or applications include: a common time base for correlating scientific observations made at widely separated sites - e.g., monitoring of geophysical events; the coordination of switching operations to control power flow in large interconnected electric power networks; a timing reference for analyzing the sequence of events before and during faults in the electric power networks; the synchronization of various types of communication networks and systems; calibration labs and other organizations needing an NBS-traceable timing reference at an accuracy level of better than 1 millisecond; and a convenient, widely accessible source of "coarse" time for systems such as electronic navigation systems that have internal capabilities for synchronization at much higher accuracy levels.

The GOES time code is designed so that it can be used at two different accuracy levels, depending on each user's particular requirements. If the highest possible accuracies are not needed, only part of the time code information need be used with a resulting reduction in equipment cost and complexity. However, by making use of the satellite position data transmitted along with the time information, a user has the option to achieve higher accuracies but at the expense of a more sophisticated receiver.

In contrast to many other sources of timing signals, such as Loran-C navigation transmissions, the GOES satellite time code provides complete UTC time information, including the year, day-of-year, hour, minute, second, and

fraction of a second. In addition, the code also gives certain other related information such as indicators for standard or daylight saving time, leap years, the difference between UTC and the astronomical time scale UT1, indicators for the current accuracy of the transmitted time signals, and system diagnostic indicators. Full details on these features of the time code format are made available to receiver manufacturers so that users can have access to the complete information via the commercial receiver versions.

B. Link to the NBS Primary Standards and Time Scales

The GOES time code is designed and operated in such a way that the actual received time signal at the user's location is directly related to the primary UTC(NBS) atomic time scale maintained by the NBS Time and Frequency Division in Boulder, CO. Since this UTC(NBS) time scale is based on the primary NBS Frequency Standard, users with access to the GOES time code essentially have access to the primary NBS standards, though, of course, with appropriate accuracy degradations due to the links to the users that are involved.

Since NBS does not own or control the overall GOES satellite system, there are a number of constraints placed upon how the links to the users are implemented and operated to minimize accuracy degradations. For example, NBS cannot transmit its time signals directly from the Boulder, CO, location of the primary standards to the satellites, but rather must perform this operation from NOAA'S Satellite Control Facility at Wallops Island, VA. As a result the time code system must be designed so that, effectively, a version of UTC(NBS) can be established and accurately maintained at Wallops Island. Details of how this is accomplished will be discussed later in this document, but the basic method used is to maintain a set of independent atomic frequency standards and clocks at Wallops Island and then to periodically measure them in terms of UTC(NBS) and adjust their outputs accordingly to remain within certain limits relative to UTC(NBS). Similarly, NBS is dependent on NOAA for the basic satellite tracking data used to generate predictions of satellite position for path delay compensation. NBS has no control over the quality of the satellite tracking data, but continuously monitors timing errors in the received time code and attempts to keep users informed when system errors are larger than normal.

Based on many years of continuous monitoring of the GOES time code performance, we can conclude that: (1) the time signals generated at Wallops Island by the NBS equipment can be kept within 10 microseconds of UTC(NBS) at all times; (2) the received time code can be used anywhere within the hemispheric coverage area at an accuracy level of about 1 millisecond by making only a constant correction to all data for the approximate geographical location of the receiver; and (3) the received time code can usually provide better than 100-microsecond accuracy with respect to UTC(NBS) by using the satellite position data to compensate for path delay variations.

C. Reliability and Performance Verification Aspects

NBS has designed the GOES time code dissemination system with the point of view that the service should be essentially as reliable as the other NBS time and frequency dissemination services, such as WWV, WWVH, and WWVB. In

practical terms this implies downtimes of less than 0.1%. To achieve this level of reliability a number of features and operational capabilities have been built into the equipment and control procedures. Double or triple redundancy is used for all critical subsystems at Wallops Island, including the atomic frequency standards, time code generators, and communications components. Additional spare units are maintained and are regularly operated and monitored in Boulder. Redundant data acquisition equipment is also used at both sites. Complete diagnostic information on the Wallops Island equipment is continuously generated automatically and can be accessed from Boulder at any time via dial-up telephone lines. System "health" indicators are also transmitted as part of the time code message and are routinely monitored in Boulder. The time outputs from the three redundant time code generators at Wallops Island are automatically compared and an out-of-specification result immediately generates alarms at Wallops Island to alert the NOAA staff of a problem and transmits an appropriate alarm signal over the satellite link to the monitoring system in Boulder.

To further guard against errors in the transmitted time code, particularly those that might be dependent upon the specific geographical location, independent time code monitoring facilities are maintained at Ft. Collins, CO; Washington, DC; and Kauai, HI in addition to the extensive monitoring at NBS/Boulder. The system control capabilities that enable personnel in Boulder to insert updated data in the Wallops Island equipment and to adjust as necessary the basic frequencies and times involved via dial-up telephone lines are also duplicated at Ft. Collins, CO for redundancy. Essentially all monitoring and control procedures can be conducted equally well from either the Boulder or Ft. Collins sites with trained personnel at each location.

D. Support for Time Code Users

NBS attempts to provide active support for GOES time code equipment manufacturers and users. Timely responses are provided to requests for information. Special publications and brochures are generated and widely distributed. At appropriate intervals technical presentations are made at conferences and meetings to inform users and potential users of the current capabilities and performance of the time code system. Each month relevant information about the time code system and performance, including performance perturbations, scheduled changes in operations, and other status reports, is published in the Time and Frequency Bulletin and distributed to a large mailing list that is updated annually. For those users needing to know such information on a more timely basis, NBS maintains a GOES status file in the U.S. Naval Observatory's Automated Data Service in Washington, DC. Interested users can access this computer file of current information at any time free of charge using any type of standard communications terminal.

GOES SATELLITE TIME CODE DISSEMINATION: DESCRIPTION AND OPERATION

3. DESCRIPTION OF SYSTEM

A. Introduction

The complete system to generate, monitor, and evaluate the GOES satellite time code includes subsystems at a number of different locations. The time code is actually generated at NOAA's Satellite Control Facility at Wallops Island, VA. This site also includes data acquisition equipment, alarm systems, and communications equipment. The critical orbital element information, needed in the computation of the satellite positions for path delay correction, is generated from NOAA and NASA satellite tracking data and distributed from NOAA's Satellite Operations Control Center in Suitland, MD, to NBS/Boulder and NBS/Ft. Collins. After the orbital element information is used in Boulder as input to a large satellite orbit determination computer program, the resulting predictions of each satellite's position each hour for a ten-day period are transmitted back to the time code generation system at Wallops Island for inclusion in the time code message sent to the satellites. In addition to generating the position prediction data, the NBS/Boulder site is responsible for overall control of the time code system, updating the information being transmitted in the time code as appropriate, monitoring the status of the Wallops Island equipment, responding to any system abnormalities, continuously monitoring the performance of the GOES/East and GOES/West time codes as received in Boulder, archiving all monitoring data from Boulder and the other monitoring locations, notifying users of the overall system status, and coordinating all operations with the backup time code system operator at Ft. Collins, CO. Time code monitoring operations are conducted at Washington, DC; Kauai, HI; and Ft. Collins, CO, as well as in Boulder. The remainder of this section includes more details on the various functions and equipment at each of the sites mentioned.

B. Wallops Island, VA

Figure 2 shows a block diagram of the NBS subsystems located at NOAA's Wallops Island Satellite Control Facility. The basic time and frequency reference is obtained from a set of two independent cesium atomic frequency standards. Their outputs drive three independent time code generators, designated TCG A, TCG B, and TCG C. Provisions are included for inserting rate offsets for each cesium standard (to keep the reference frequencies in agreement with the rate of the UTC(NBS) time scale) and time offsets for each time code generator (to keep the actual time outputs synchronized to the UTC(NBS) time scale). The rate and time offsets can be entered into the system via a dial-up communications link from Boulder. Because of the extremely high stability of the cesium standards used, the rate corrections are very small (typically, less than a few parts in 10^{12}) and need to be revised only about once per year. The outputs of the three time code generators are continuously compared and, if normal limits are exceeded, generate an audible alarm to alert the Wallops Island personnel to immediately inform NBS of the situation.

WALLOPS ISLAND GOES TIME CODE SYSTEM

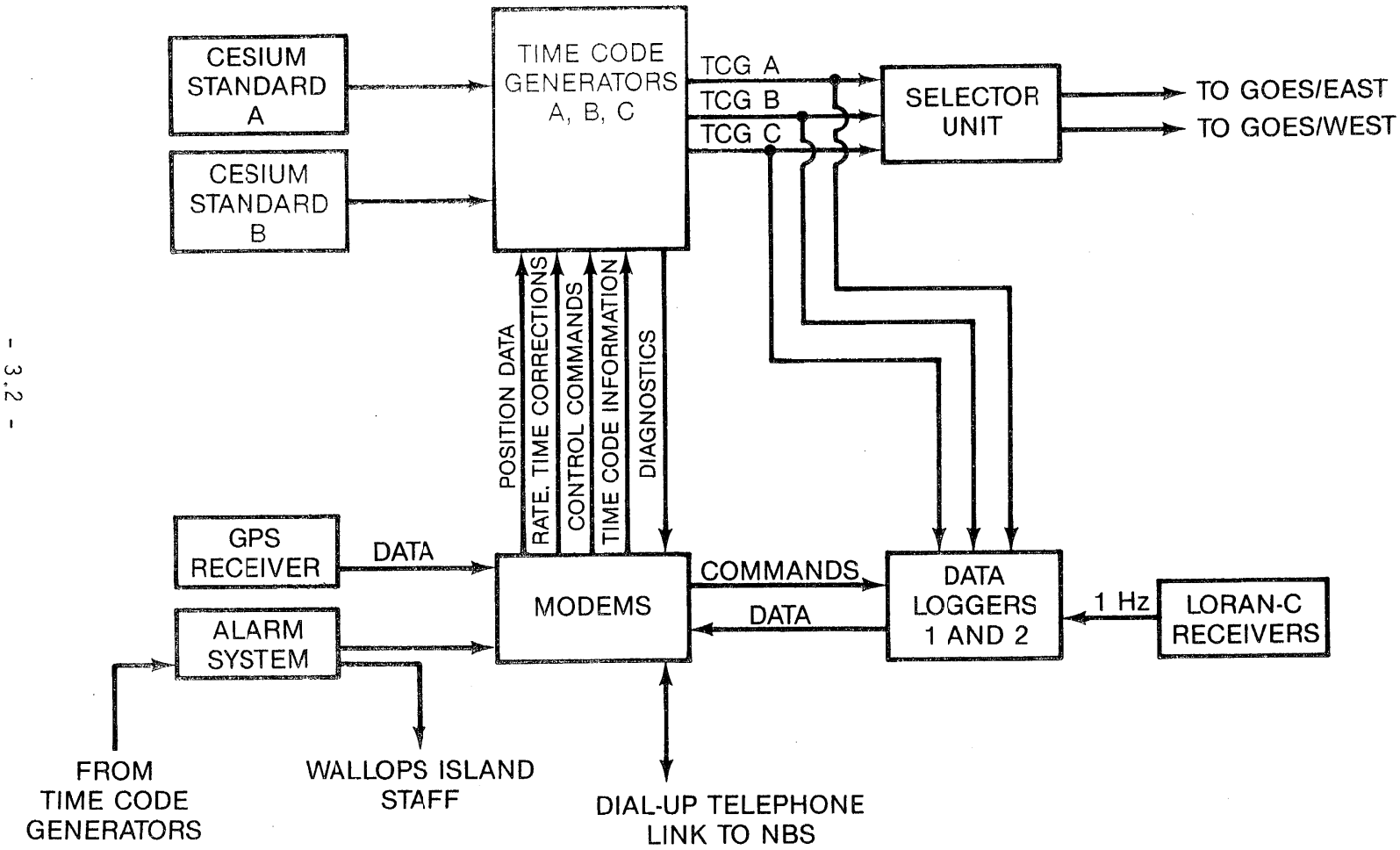

Figure 2

Generally, the alarm circuitry is set to generate alarms if any two time code generators differ by more than about 15 microseconds. Time adjustments can be performed as necessary from Boulder in steps of integral multiples of 0.2 microseconds. The output of any of the time code generators can be selected to provide the actual coded time information to the GOES/East and GOES/West satellite uplink systems.

The satellite position data included along with the basic time information are stored in each time code generator's memory and are kept current by periodic updates from Boulder via the dial-up link. Although the position data from Boulder include new values only for each hour, the Wallops Island systems interpolate between these values each minute so that the users of the received time code can obtain path delay corrections that accurately reflect the satellite's position at all times. The position data as transmitted include the latitude, longitude, and a radial distance relative to a fixed reference satellite orbit. These data, together with the known locations of the Wallops Island origination point and the receiver, are sufficient for the computation of the particular propagation-path delay with a resolution of less than 1 microsecond.

The Wallops Island equipment also includes doubly redundant data loggers for storing one month of daily measurements on each of 8 data channels and more than 5 days worth of hourly measurements of each time code generator output. These measurements are typically differences between the time code generators and a received Loran-C navigation system signal. Since the Loran-C timing signals are also monitored versus the UTC(NBS) time scale in Boulder, the Wallops Island measurements can be used to indicate when the atomic standards or time code generator outputs need to be adjusted in order to keep the transmitted time code within acceptable limits relative to UTC(NBS). The stored measurement results are periodically examined remotely from Boulder via the dial-up link to assure proper system performance.

The Wallops Island time code generation software also contains provisions for including other types of information in the time code as transmitted. This includes: (1) accuracy indicators to alert users when the time code accuracy is degraded for any reason; (2) indicators for daylight-saving-time periods; (3) an indicator to alert users that a leap second will be inserted into UTC(NBS) at the end of the current month; (4) position data for a spare GOES satellite during eclipse periods when the NBS time code may be switched to the spare satellite for two hours each day; (5) the current value of DUT1, which gives the approximate difference between the astronomical UT1 and the UTC time scales; (6) an identifier of the current "on-the-air" time code generators; and (7) certain system health status indicators to alert NBS/Boulder personnel of selected abnormal conditions at Wallops Island.

Once the NBS time code signals are inserted into NOAA's GOES uplink equipment, NBS has no further control over the dissemination of the time code. Clearly, a high degree of cooperation is necessary between NOAA and NBS to insure that the overall time code dissemination process functions smoothly and with the performance and excellent reliability characteristic of other NBS services. As mentioned previously this cooperative arrangement is formalized by an NBS/NOAA Memorandum-of-Agreement initiated in 1977 and renewed periodically.

C. Space Segment

The operational GOES satellite system normally consists of two operational satellites serving as GOES/East and GOES/West, an in-orbit spare satellite positioned approximately midway between these two, and a varying number of partially inactive, older in-orbit standby spacecraft. This space segment is totally owned and controlled by NOAA. The time code signals are normally uplinked continuously to both operational satellites on an S-band frequency as part of the interrogation channel used to communicate with the various Data Collection Platforms in the environmental sensing system. The time codes are then transmitted back to earth on downlink frequencies of 468.8375 MHz and 468.825 MHz for GOES/East and GOES/West, respectively. The time code transmissions are then received on the earth at a signal level of approximately -130 dBm.

During normal operations the time codes are transmitted continuously through the GOES/East and GOES/West satellites. However, due to certain electrical power constraints in the present generation of GOES satellites, some modifications are sometimes invoked during two eclipse seasons each year when the solar panels do not generate sufficient electrical power to maintain normal operations. These periods are generally from 1 March to 15 April in the Spring and from 1 September to 15 October in the Fall. Since the eclipse period each day is centered at midnight at the local longitude of the satellite, NOAA sometimes switches the time code operations from the normal operational satellite to the spare satellite, located at about 100 degrees W. longitude, for a two-hour period each day centered around 0500 UT for GOES/East and 0900 UT for GOES/West. During the most recent period (Fall of 1987), NOAA was able to avoid such temporary switching operations due to the availability of newer satellites, GOES-6 and GOES-7. All future generations of GOES satellites are expected to have higher power capabilities and will therefore not require special procedures during the eclipse periods each year.

D. NOAA Ground Facilities

In addition to the NOAA Satellite Control Facility at Wallops Island, VA, other NOAA facilities are also important in the functioning of the NBS time code dissemination system. The NOAA-provided satellite tracking data have already been mentioned. In the normal mode of operation NOAA generates sets of satellite orbital elements approximately once each week by processing the tracking data derived from measurements made at Wallops Island. These orbital elements are then distributed to interested users, including NBS, by Telex from the NOAA Satellite Operations Control Center in Suitland.

NOAA's computer facilities at Suitland, MD have also proved helpful to NBS under some modes of operation by offering an independent, alternative access to computed satellite position data through the direct accessing of NOAA-generated ephemeris data files maintained at Suitland. This procedure can offer advantages relative to the NBS/Boulder processing of the satellite orbital elements in the sense that the NOAA ephemeris files are updated more often (every few days) than the orbital elements that are distributed to user organizations via Telex. The Suitland file access also generally allows the

position data in the time code to be updated with a shorter delay after a satellite maneuver. However, the NOAA ephemeris files accessible to NBS apply only to satellites being used for the visual imaging operations. In some cases, when the visual imaging and time code dissemination functions are performed by different GOES satellites, NBS must rely on its own position predictions generated on the NBS computer system from the satellite orbital elements.

E. NBS/Boulder

NBS/Boulder serves as the central control facility for the GOES time code operations. In addition, this site is responsible for a variety of other functions including overall system monitoring, communications, coordination with the various NOAA groups, documentation of system performance, software and hardware development and maintenance, position data generation, user support, and the archiving of performance data.

Figure 3 is a block diagram showing the principal subsystems used at NBS/Boulder in the time code operations. The monitoring subsystem includes a minimum of six time code receivers, redundant data loggers, and microcomputer hardware and software for analyzing, plotting, and archiving the satellite data. The GOES/East and GOES/West time codes are each monitored continuously by a set of three receivers. One of these is a version that receives the raw time code without making use of the satellite position data to compensate for path delay variations. The other two are more sophisticated versions that function as primary and backup units to receive the code and use the satellite position information to compensate for the path delays. The receiver outputs are measured against a direct feed from the NBS atomic time scale system which provides a direct measurement of the difference between the received signal and UTC(NBS). As an aid in assessing overall system performance, the corrected (for path delay) and uncorrected receiver outputs for both the East and West satellites are plotted continuously on strip chart recorders as well as being stored in electronic form. The monitoring system also includes an oscilloscope display of the received 100 Hz clock waveforms which are sensitive indicators of the current status of local interfering signals generated by nearby land-mobile radio communications. A specially modified time code decoder is also used in the monitoring system to decode and display the other information in the time code transmissions - e.g., the accuracy indicators, daylight-saving-time status, leap-second status, DUTI value, on-line TCG identifiers, and Wallops Island equipment alarm indicators. Finally, the monitoring subsystems in Boulder include the capability to monitor the status of a duplicate set of time code generators and data loggers identical to that in use at Wallops Island. These units are maintained as spares for the Wallops Island subsystems and, in addition, can serve as testbeds for software/hardware upgrades or modifications before such changes are implemented in the operational systems.

The NBS/Boulder facility also includes the necessary subsystem components for producing the satellite position predictions in a form compatible with the Wallops Island equipment. The primary computer processing is performed on a large mainframe computer system running a version of NASA's Goddard Trajectory Determination System (GTDS) orbit determination program. The critical input

NBS/BOULDER GOES TIME CODE MONITORING SYSTEM

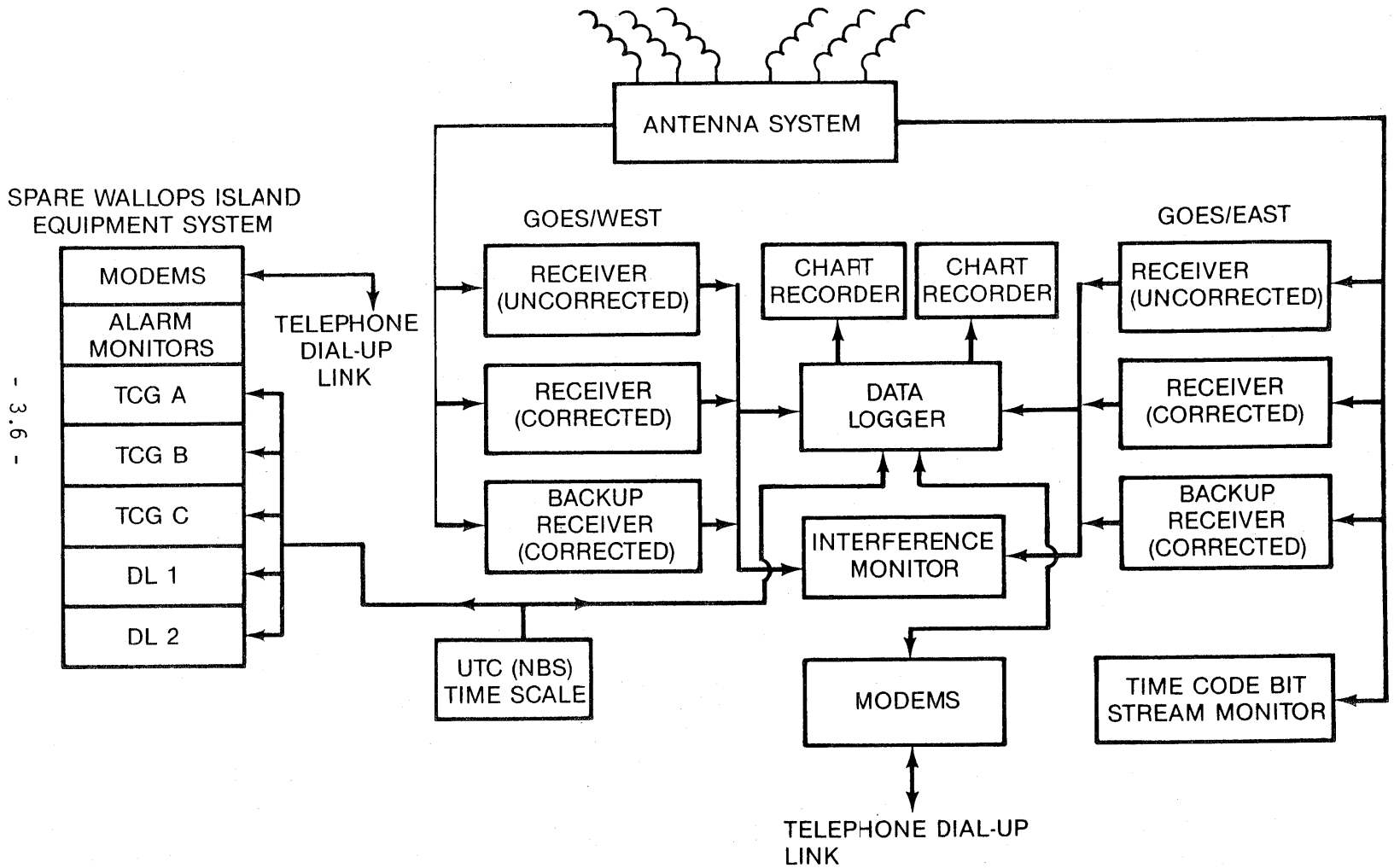

Figure 3

data for this program consist of the satellite orbital elements, supplied to NBS by NOAA. Typically, the GTDS program is run about once per week to generate position predictions 10 days in advance for each operational satellite carrying the time code. The GTDS program outputs a file of position data which can be transmitted directly to the Wallops Island subsystem. When the alternative position-data-generation procedure is used, in which the data is actually generated by NOAA's Suitland, MD computer, the function of the NBS/Boulder facility is to transfer the data files from Suitland to Boulder over a dial-up link, reformat the data to be compatible with the Wallops Island system, and then transfer it to Wallops Island. The various file transfers involved in all of these operations are conducted using a dedicated microcomputer system running commonly available commercial communications software or, in the case of the Boulder - Wallops Islands transfer, specially developed file transfer software to provide for necessary error-checking.

The file transfer capabilities via dial-up links are also used routinely from Boulder to access the remote time code monitoring system in Washington, DC. Data transfer from the Hawaii monitoring site is done by physical transfer of data tapes, since the Hawaiian phone lines do not always support reliable data transfers. All monitoring data are examined for any signs of problems and then archived in computer files for later use. The archived data include hourly measurements from eight different receivers in three different geographical locations.

The NBS/Boulder system provides control functions by allowing various commands and interrogation messages to be easily communicated to the Wallops Island equipment. Capabilities include the loading of updated position data, making time and/or frequency adjustments to the basic references, examining and resetting the alarm systems, re-initializing the time code generators and data loggers in the event of a total electrical outage, examining and transferring the monitoring data files, arming the system for automatically updating the value for DUT1 or inserting a leap second at a specified time, arming the system for automatic transmission of position data for the spare satellite during eclipse periods, initiating instantaneous measurements of any of the 1-Hz signals, and updating and/or verifying the contents of any portion of the system's memory.

NBS/Boulder also serves as the focal point for contacts with GOES time code users and equipment manufacturers. Information about the time code is disseminated in a variety of ways. In addition to the normal responses to correspondence, telephone calls, and visits, status information about the system is made available to interested users by publication in the monthly Time and Frequency Bulletin and, more currently, through a status file maintained and updated regularly by NBS/Boulder as part of the U.S. Naval Observatory's computerized Automated Data Service. For more complete and longer-term information dissemination needs periodic technical papers and reports are presented at appropriate conferences.

F. Ft. Collins, CO Backup Facility

In order to provide backup equipment and personnel for performing all the essential GOES time code monitoring and control operations, a complete backup

system has been established at the NBS WWV/WWVB radio station site near Ft. Collins, CO under the control of the Engineer-in-Charge. The facility includes a dedicated microcomputer system, communication links and software, monitoring receivers for both the East and West satellites, and data storage. This site performs all necessary functions in the absence of Boulder personnel, in case of Boulder equipment malfunctions, and routinely on a reasonably periodic basis to maintain skills and to verify proper operation of the backup equipment and procedures. The Ft. Collins site is set up to receive all GOES-related communications from NOAA (via Telex) independently of Boulder.

G. Auxiliary Monitoring Sites in Washington, DC, and Kauai, HI

Because the position data transmitted in the time code may produce path delay corrections that depend on geographical location in unanticipated ways, independent time code monitoring facilities are maintained outside the Boulder/Ft. Collins area. The GOES/East satellite is monitored independently at the U.S. Naval Observatory in Washington, DC. A GOES time code receiver operates continuously there and outputs its hourly measurements in terms of the UTC(USNO) time scale to a file in the USNO computer system. These data are then accessed from Boulder once per week and transferred to the NBS archival files. Comparisons of these measurements with the corresponding data from the Boulder systems are useful in detecting degradations in the quality of the timing information as received, especially, during periods when the satellite orbital elements are of lower quality than normal. In addition to this monitoring role, as has been previously mentioned, the USNO facility is used to house a computer file of current GOES system status information and relevant announcements intended for users of the time code. This status file is accessible to any user free of charge by simply dialing up the USNO system with a suitable terminal and requesting the NBS file. The information in the file is updated as needed remotely from Boulder.

For similar reasons an independent monitoring capability for GOES/West is maintained at NBS radio station WWVH located in Kauai, HI. This receiver's data are stored on floppy disks which are mailed to Boulder at two-week intervals. The data are then transferred into the archival files using a specially developed formatting program. The WWVH GOES measurements are referenced to the local WWVH time scale system which is kept synchronized to within five microseconds of UTC(NBS) at all times via higher-accuracy GPS satellite comparisons with Boulder and by occasional portable clock comparisons with other standards.

GOES SATELLITE TIME CODE DISSEMINATION:
DESCRIPTION AND OPERATION

4. OPERATIONAL PROCEDURES

From the user's point of view the GOES satellite time code can almost be considered as a utility service that is conveniently and continuously available over a wide geographical area without the need for detailed knowledge about how the service is provided. The procurement and simple installation of a suitable GOES time code receiver provides NBS referenced time at the user's site to within the published specifications with the complex support operations and procedures conducted by NBS and NOAA being largely transparent at the point of use. In this section the supporting operations that are critical to insuring that the delivered timing signals remain within established limits will be briefly described. The operational procedures to be described are grouped into several major categories involving: (1) updating of the satellite position data; (2) verification of the time and frequency performance of the Wallops Island equipment and the related adjustments; (3) updating and verification of other data stored in the Wallops Island systems and included in the time code transmissions; (4) monitoring operations at NBS/Boulder; (5) monitoring of the GOES time code performance at other sites; and (6) user notification channels.
In performing the various operational procedures involved with the GOES time code, many different hardware and software subsystems are used, including large mainframe computers at NBS/Boulder and at NBS/Gaithersburg, microcomputer systems at Boulder and Ft. Collins, CO, commercial communication software packages for the microcomputers, numerous items of commercial and highly specialized NBS-built time and frequency equipment, a complex satellite-orbit-determination computer program originally developed by NASA, numerous special-purpose computer programs developed by NBS, and other hardware and software systems owned by organizations such as NOAA and the U.S. Naval Observatory. Since it is clearly impractical to describe in detail how all this hardware and software operates, only a general description of the various procedures used to support the service is given.

1. Procedures for Updating the Satellite Position Data

1.1. Generation of Updated Satellite Position Data

The procedure involves obtaining the most recent available satellite orbital elements from NOAA, entering this and certain other information as input into the GTDS orbit determination program, running the GTDS program on a mainframe computer, and downloading the resulting position data file to a local microcomputer system. The sets of orbital elements for each of the two operational GOES

satellites relaying the time code originate with the NOAA satellite tracking networks and the NOAA satellite navigation personnel in the Washington, DC, area. The orbital elements are distributed to interested users such as NBS approximately once per week by Telex. In addition to these routine updates resulting from more recent tracking data, NOAA also generates and distributes sets of predicted post-maneuver orbital elements just prior to any satellite maneuver, such as those performed occasionally to maintain the satellites' orbital location near their assigned longitudes.

The orbital elements provide input information needed by the GTDS orbit prediction program to project satellite positions during the next ten-day period. These data are inserted into the GTDS program by running a special procedure program that requires only simple data entry in response to prompts. The main GTDS program is then run on the mainframe by a straightforward command from the local microcomputer system operating in a terminal mode. Normally, this operation is completed within a few minutes, resulting in the creation of a file giving predicted satellite positions (latitude, longitude, and radius) for each hour during the next ten days. This file is then downloaded to the local microcomputer in an ASCII text format that can be directly sent to the Wallops Island time code generation system.

1.2. Transfer of Satellite Position Data to Wallops Island

The file of predicted satellite positions at hourly intervals is then transmitted by a dial-up telephone link to the NBS time code generation systems at NOAA's Satellite Control Facility in Wallops Island, VA, by using a special-purpose data transfer program. The program is designed to transmit in blocks of 24 hourly lines of data, checking the received echo response of each character against the original value. After each block further checks are made to test transfer integrity by issuing appropriate commands to the time code generators and observing the resulting responses. Any discrepancies, such as are sometimes caused by poor telephone circuit quality, cause the program to abort the load operation and the process must be repeated until no errors are detected. The valid data are then stored in designated memory locations within the time code generators, where they are accessed at the appropriate times for inclusion in the transmitted time code format along with the time information. The time code generators also perform an interpolation function between the hourly values, so that the transmitted values are actually updated each minute.

2. Procedures for Verifying Wallops Island System Time and Frequency Performance and Making Related Adjustments

2.1. Checking Performance of the Wallops Island Clock System

By accessing the Wallops Island equipment using a dial-up telephone link with a microcomputer system operating in a terminal mode, we may command the system to display two types of performance data: (1) a set of recent hourly and daily measurements of each of the time code generator outputs versus a local reference standard, which is normally a Loran-C timing receiver or a GPS satellite receiver; and (2) current, instantaneous measurements of any selected TCG output versus the Loran-C reference. Alternatively, the direct time difference between any two time code generators can be observed by issuing a suitable command. This procedure allows Boulder or Ft. Collins operational personnel to monitor the performance of each time code generator and atomic frequency standard system in terms of external references (Loran-C or GPS satellites) that can be related easily to UTC(NBS). Also, their relative performance can be easily monitored so that adjustments can be made to individual subsystems when the drift rates become excessive. Such measurements are routinely monitored every few days and whenever any type of automatic alarm is generated by the system itself. Currently, the measurements of the on-line time code generator in terms of the GPS satellite system time provide the best method for insuring that the GOES time code, as transmitted, does not depart from UTC(NBS) by more than a few microseconds.

2.2. Checking and Resetting Wallops Island System Date and Time

Provisions that allow a remote operator to easily check and, as appropriate, reset the system's date and/or time are included in the Wallops Island time code generation system. Using a microcomputer in a communications terminal mode, the operator simply sends appropriate commands to the equipment to adjust any portion of the current date or time. This procedure is normally required only in the event of a major electrical power problem at Wallops Island, a serious NBS equipment malfunction, or occasionally to make a routine adjustment of the 1-hertz outputs to compensate for the small drift rates of the atomic standards with respect to UTC(NBS).

2.3. Verifying and Resetting the Wallops Island Clock Rate Words

Since it is generally not a good idea to actually adjust a cesium standard's frequency by frequent C-field changes and since no NBS personnel are available at Wallops Island to perform such tasks, a remote capability has been provided in the system to effectively

allow frequency or rate adjustments to the basic standards. This is accomplished indirectly in the time code generators by a provision for adding or subtracting a selected number of 0.2 microsecond steps per day, thus effectively adjusting the output frequency of the cesium standard. The procedure simply requires an appropriate command to be issued from Boulder or Ft. Collins by the microcomputer system running in a terminal mode that modifies the "rate word" stored for each of the independent TCG's.

Rate adjustments are normally made very infrequently. Many years of experience has shown that, once the rate compensation is correctly determined and implemented in the system, it generally is unnecessary to revise it more often than about once per year. During the interim periods, of course, occasional small time adjustments are made to the 1-Hz outputs as described above to maintain all reference signals within acceptable tolerances of a few microseconds with respect to UTC(NBS).

3. Procedures for Updating and Verifying Other Information in the Wallops Island System

The transmitted time codes on the GOES/East and GOES/West satellites contain, in addition to the time and position information, other related information for the benefit of time code users. This includes indicators of the current difference between the UT1 and UTC time scales, impending leap seconds, current accuracies of the timing information, daylight savings time periods, and the current year. This information must be manually loaded into the appropriate memory locations in the time code generators from Boulder and revised as necessary. Other information must also be loaded which provides default satellite position data to be broadcast under certain conditions, such as when the satellites are in eclipse, and which performs certain system configuration functions on the time code generators and data loggers.

In each case the appropriate data are loaded into the Wallops Island equipment by sending a command word from the local microcomputer system that specifies the number of bytes to be loaded, the value of the data bytes, the memory location where the data are to be stored, and a destination indicator (particular time code generator or data logger). Similarly, commands can be sent that cause the Wallops Island system to respond with the values of the data currently stored in any memory location.

In some cases the data become effective immediately when loaded; for example, a new value for the system accuracy is reflected immediately in the transmitted time code. In other cases the loaded data arms an internal process which results in the revised values becoming effective

at some specified future time. Thus, for example, it is possible to set new values for the DUT1 correction, the daylight-saving-time indicator. the leap second warning indicator, and the operational mode during eclipse periods, all of which affect the time code content at a later time. In the rare case where a complete system outage has occurred and all data must be re-entered into the systems as quickly as possible, special "cold start" programs have been developed to automatically reload all the current system parameters into the time code generators and data loggers with minimal required involvement of the Boulder or Ft. Collins operator.

In performing most of these data loading operations the system operator has a choice of using either a manual or a partly automated procedure. The manual technique requires the operator to accurately formulate the command word, transmit it to Wallops Island, and then to issue a "dump" command to verify that it was completed successfully. In the alternative, partly automated procedure the operator can make use of a specially developed software program that has been designed for maximum convenience. In using this completely menu-driven program the operator selects which parameter he wishes to load into the system from a menu and responds to prompts for the values of the data bytes to be loaded and any other necessary information. The program then constructs the appropriate command word, transmits the command to the equipment, issues a verification command, and displays the results to the system operator. In general, a totally experienced operator may prefer the manual approach since it is quicker, while a backup less-experienced operator may prefer the security and convenience of the automated software.

4. Monitoring Operations at NBS/Boulder

4.1. Verification of Current Time Code Performance

A capability is maintained both at NBS/Boulder and at the NBS Ft. Collins site for monitoring the current and recent timing performance of the received time codes from GOES/East and GOES/West and the current operational status of the overall system. The monitoring systems include a number of satellite time code receivers that continuously receive signals from both satellites, chart recorders to provide a continuous plot of the received signals versus UTC(NBS), data loggers similar to those at Wallops Island, a specialized decoder for decoding and displaying certain selected bits in the serial time codes, and suitable microcomputer equipment for processing and storing the data.

Normally, the chart recorders are observed several times each work day to insure proper time code performance. Four plots are routinely generated: GOES/East and GOES/West uncorrected for satellite

position versus UTC(NBS) and GOES/East and GOES/West corrected for satellite position. The corrected plots should normally stay within 100 microseconds of UTC(NBS) except for brief periods following major satellite maneuvers. An oscilloscope display is maintained to show the status of interference that may be perturbing one or more receivers. Not much can be done about the interference when it is troublesome, but it can help explain changes in observed performance. The data loggers may be accessed at any time to view the most recent 128 hourly measurements of the received signals or the most recent 30 daily values.

4.2. Archiving and Retrieving Past Time Code Performance Data

Procedures have been developed to store the GOES monitoring data on a hard-disk system and to retrieve any selected portion of the data for examination or plotting. The routine monitoring data from the NBS/Boulder and Ft. Collins systems are normally transferred from the data loggers to the hard-disk files each Monday and Friday. Since the data loggers store the most recent 128 hours of data, this procedure insures that no data are lost. The retrieval and plotting procedures are performed whenever such data are needed. Generally, 5-day plots are produced for examination every few days to check on proper system operation and hardcopy plots are produced on a monthly basis for archival purposes. Data plots for periods of up to 5 years are generated occasionally for special publications and presentations. Three special-purpose computer programs have been written to store the data logger data in archival files, plot the current data from the data logger, and plot any selected portion of data from the archival disk files.

4.3. Initialization of the Data Logger Systems

The data loggers used in the monitoring operations at NBS/Boulder have provisions for driving chart recorders as well as for storing past measurement data digitally. Upon initial setup or after electrical power outages an initialization procedure must be executed to define start and stop pulses for each of the eight channels and to define various parameters associated with the analog outputs for the chart recorders. A special purpose software program is available to initialize these parameters automatically or they can be entered into the equipment manually by transmitting appropriate command words from a microcomputer system acting as a terminal.

5. Monitoring Operations at Other Sites

5.1. U.S. Naval Observatory (USNO), Washington, DC

A capability has been established to accumulate and archive monitoring data from GOES/East as received at the USNO site as an independent check on the GOES/East time code performance. It is important to have access to independent monitoring data from a different geographical location from Boulder since some time code perturbations, such as effects due to poor quality satellite orbital elements, are expected to be geographically dependent. The receiver at the USNO monitors the GOES/East satellite continuously and transfers its data to a file in the USNO computer system. The data are in the form of hourly measurements of GOES/East versus UTC(USNO). The file capacity is set to be about 10-11 days worth of the hourly data. Data can be retrieved at any time by accessing the USNO Automated Data Service and downloading the appropriate file. In order to perform some error checking during the file transfer and to store the resulting data properly in the NBS archival GOES data files, a special downloading program has been developed.

5.2. NBS/Ft. Collins, CO, Site

Facilities are maintained at NBS radio station WWV at Ft. Collins, CO to monitor the GOES/East and GOES/West time codes from an additional site and to provide a real-time indication of the results of the various control operations that are performed from Ft. Collins in its role as a backup operational control and monitoring center for the GOES time code.

Continuously operating time code receivers are used to monitor the East and West codes. At present the measurements of the differences between the received GOES satellite timing signal and the local UTC(WWV) timing system are preserved in a data logger and in disk files but are not archived in the Boulder data files. They serve mainly as an indication of system performance when new position data are inserted into the Wallops Island system from Ft. Collins.

Procedures involved for logging, displaying, archiving, and plotting the received data are essentially identical to those used for the NBS/Boulder system.

5.3. NBS/Kauai, HI, Site

NBS also accumulates and archives GOES/West monitoring data from a site at NBS radio station WWVH on Kauai, Hawaii. The data are monitored continuously by a time code receiver and hourly measurements are stored in a data logger. Twice each week the data are downloaded to a microcomputer disk file. At intervals of approximately one month, data are transferred from WWVH to Boulder.

The procedures for data collection and data logger setup are essentially identical to those employed at Boulder and Ft. Collins.

6. User Notification Procedures

6.1. NBS Time and Frequency Bulletin

To keep users informed of changes in the GOES system or operations and to report significant perturbations to the time code performance as observed at NBS/Boulder, one section of the monthly Time and Frequency Bulletin is devoted to reporting such information. This provides one means of keeping GOES time code users informed about past, current, and future developments in the service but has the disadvantage that the information may be more than a month old by the time the Bulletin reaches the end user.

Past and current performance information is based on the extensive monitoring capabilities described previously. Information about future developments, such as revised operational modes during upcoming eclipse periods or the anticipated launching of new satellites, is obtained through periodic contacts with various NOAA officials concerned with relevant aspects of the overall GOES satellite system.

6.2. GOES Status Reports in the USNO Automated Data Service System

In order to provide a mechanism for informing users of the GOES time code about the current status of the system on a more timely basis than is possible by the NBS Time and Frequency Bulletin, NBS and the USNO cooperates by maintaining a status file in USNO's Automated Data Service that is accessible to any user at any time free of charge. The GOES status file in the USNO computer system is updated by NBS GOES personnel whenever there is a significant event to report. Every effort is made to report changes and announcements as soon as practical. The file is named "NBSGO" and users access it by using a standard type of computer terminal or a microcomputer operating in a terminal mode at 300, 1200, or 2400 Baud using even parity and 7 data bits. The user is only required to dial the appropriate access telephone number, answer a prompt with his name and organization, and then transmit the command "@NBSGO" followed by a carriage return in order to download the status file.

The procedure for updating this status file consists of preparing a suitable text file using a word processor and microcomputer system, accessing the USNO system by appropriate passwords, transmitting the file to the USNO computer system, and then reading the file for verification purposes. Examples of information reported include

recent abnormal performance perturbations in the time code, announcements of upcoming satellite maneuvers and their likely impact on users, and notifications about revised operations during eclipse periods.

GOES SATELLITE TIME CODE DISSEMINATION:
DESCRIPTION AND OPERATION

5. ASSESSMENT OF UNCERTAINTIES

A. Introduction

In a one-way time dissemination system, such as the GOES satellite time code, there are a number of error sources that can degrade the accuracy of the timing signal as received at the user's site, even if the signal is assumed to be exactly on time at the origination point at Wallops Island, VA. The principal reason is that several components of the distribution system may introduce additional time delays as the transmitted signal follows the Wallops Island-to-GOES-satellite and satellite-to-user path. To the extent that such additional delays are known or measurable and remain constant with time, it may be possible to account for them without adversely affecting the overall performance of the system.

In the case of the GOES time code the major potential error sources include the following:

1) Time differences between the Wallops Island reference clocks providing the time code signals and the UTC(NBS) time scale;
2) Delays due to the electronic processing equipment at Wallops Island that take the NBS time code signal as input and convert it into a suitable form for transmitting to the GOES satellites;
3) The free-space signal propagation delay for the path from Wallops Island to the user's location;
4) Additional delays introduced by the GOES satellite transponder as the time code signal is received and retransmitted to the earth;
5) Effects on the signal as it passes through the troposphere and ionosphere; and
6) Delays due to the user's receiving equipment.

In Section C below each of these possible error contributions will be discussed in more detail.

B. Quoted Uncertainties

NBS generally quotes three different accuracy capabilities for the GOES time code technique. For users who wish to simply receive and decode the time data without making <u>any</u> corrections for satellite path delay, the maximum error is 16 milliseconds, and the exact amount depends on the particular geographical location. For users who are willing to calibrate the path delay one time by some appropriate independent means, the time code variations will not normally exceed 1 millisecond and the system may be used at this accuracy level over long periods of time. For users with the most sophisticated receivers that use the satellite position data in the time code to compute continually updated satellite path delay corrections, the accuracy capability normally remains within 100 microseconds and often stays within 50 microseconds for long periods. In all modes of operation, however, the user must be aware that

unusual situations such as eclipse periods and satellite maneuvers can cause system accuracy to be temporarily degraded beyond these limits.

C. Discussion of Error Sources

1) Wallops Island Reference Errors. The timing outputs of the time code generators are remotely adjustable from Boulder in steps of 0.2 microsecond, and, in principle, could be kept within less than 1 microsecond of the UTC(NBS) time scale. However, since the GOES time code system is designed to provide accuracies in the 10-100 microsecond range, the reference signals from the time code generators are normally controlled only to remain within a few microseconds of UTC(NBS). As discussed in more detail in other parts of this document, the time code generator outputs are routinely monitored against appropriate references to maintain this accuracy level. This is easily performed by observing at frequent intervals the measured time differences with respect to the other time code generators themselves, the external references from Loran-C and the GPS satellite system, and most importantly, with respect to UTC(NBS) directly by continuous reception of the GOES/East and GOES/West satellite signals at Boulder and Ft. Collins, CO. These monitoring and time-adjustment procedures limit timing errors at Wallops Island with respect to UTC(NBS) to less than 10 microseconds at all times.

2) Equipment Delays at Wallops Island. As the timing outputs of the NBS equipment at Wallops Island are further processed through other electronic subsystems, such as frequency translators and modulators, to integrate them into the composite satellite uplink signal, additional time delays may be introduced. Since experience has shown that these delays remain constant over very long periods of time and are difficult to evaluate precisely without an on-site NBS staff, they are treated as fixed biases and compensated for by advancing the originating timing signals by an appropriate amount. The uncertainties and variations in these fixed delays are much smaller than the overall accuracy of the time dissemination system.

3) Free-Space Propagation Delay. Following the propagation path from Wallops Island to the GOES satellite and back to the user's location on the earth, the time code signal is delayed by approximately 260 milliseconds. The exact amount, of course, depends on the exact positions of the satellite and the user's location and can be calculated using straightforward geometrical considerations. As the satellite moves around in its geostationary orbit, the path length, and thus the signal propagation time, also change by corresponding amounts.

Since the GOES satellites are constrained to remain close to their assigned orbital locations in the geostationary arc, stationkeeping maneuvers are performed on the satellites as necessary to keep the positions within acceptable tolerances. Typically such stationkeeping maneuvers are needed several times each year. The

effect of these maneuvers on timekeeping capabilities is to place bounds on how far the path lengths and the corresponding variations in path time delays can deviate from some mean value associated with the nominal, assigned orbital location.

NBS advances the time codes at the Wallops Island origination point by exactly 260 milliseconds (the mean path delay), so that the uncorrected time code arrives at any point within the coverage area on the earth with a maximum error of 16 milliseconds. If the user is willing and able to compute, or otherwise determine, the appropriate path delay for his particular geographical location and apply this as a fixed correction to all received data, the only remaining errors are due to the variations in the received signals due to variations in the satellite position. The magnitude of the changes in the satellite position depends largely on the exact orbit of the satellite and, in particular, on the orbit inclination.

For typical GOES/East and GOES/West satellites, operating under normal conditions, many years of monitoring have shown that time code variations over periods of one day to several years rarely exceed 1 millisecond due to satellite motion. However, under more unusual circumstances, for example, when a satellite failure causes the time code transmissions to be shifted to an in-orbit spare satellite, larger variations may be produced. This may happen when the spare satellite has a larger-than-normal orbital inclination or when the orbit is not as well determined for some reason. Experience has shown that, in the worst cases, the orbit inclination may reach 2-3 degrees, resulting in time code path delay variations of between 2 and 3 milliseconds. Such occurrences, though rare, do happen occasionally and, unfortunately, are not predictable or controllable by NBS. Time code shifts larger than the typical 1-2 millisecond range may also be produced during eclipse periods during the Spring and Fall seasons each year, when time code operations are sometimes transferred to a spare satellite that is located in an entirely different orbital position for two hours each day. When this operational procedure is followed by NOAA, the result may be large changes of many milliseconds in the path delay for the affected time codes during the two-hour periods each day. However, because the shift is so large and occurs on a known schedule, it can easily be identified and accounted for by the users. Beginning with the launch of new-generation GOES satellites in 1987, this eclipse effect should be eliminated, since the newer, higher-powered satellites are designed to maintain normal operations throughout the eclipse periods without requiring shifts of operations to spare satellites. In the Fall 1987 eclipse season, for example, no time code shifts to other satellites were necessary.

For those users needing accuracy better than about 1 millisecond, NBS provides the means to make automatic compensations for any path delay variations. The procedure, as discussed previously, entails using the satellite position data transmitted along with the time information to compute the magnitude of the path delay to the user's

site. Since the position data are updated once each minute, uncertainties associated with the path delay computation can be kept relatively low. The achievable accuracy, of course, depends on the quality of the satellite position information, which in turn depends mainly on the quality of the satellite tracking data supplied to NBS by NOAA. Once again, this critical component of the overall time code system uncertainty is not under the control of NBS. Furthermore, experience has shown that the quality of the tracking data and resulting orbit determination uncertainties can vary from time to time in unpredictable ways. Generally, however, such problems do not cause time code variations exceeding 100 microseconds. Under some conditions, such as at the time of satellite maneuvers, one expects that the resulting orbital determinations may have larger-than-normal associated uncertainties for a few days until new tracking data can be accumulated and processed. The problem has not proved to be too severe, however, since NOAA routinely issues sets of predicted post-maneuver orbital elements prior to each maneuver and these are usually of sufficient quality that the resulting position predictions after the maneuver remain within our normal 100-microsecond limits. In unusual cases, when the actual maneuver differs significantly from that projected, the transmitted position data after the maneuver may produce path delay computation errors of several hundred microseconds; these may persist for up to one week until a revised orbit determination based on actual observations becomes available to NBS. To minimize the impact on users at such times NBS flags the abnormal-accuracy condition by changing an appropriate bit in the time code data stream. Some receivers are designed to detect this bit and alert the user of the degraded system accuracy and to display the approximate magnitude of the maximum error in the time code.

Even if the satellite orbit data contained no errors, some uncertainties would be introduced by any imperfections in the large, sophisticated GTDS computer program used to generate the satellite position predictions. Although the GTDS program attempts to incorporate the complex perturbing effects of the moon, sun, planets, and other forces on the earth satellite, this cannot be done perfectly for such a complex physical system. The documentation for this program requires several large volumes and the analysis of potential errors is well beyond the scope of this discussion[3]. However, there are some observations that shed some light on the level of possible errors introduced by GTDS. We consistently observe a diurnal effect in the recorded measurements of the received time code as corrected for path delay versus the "standard," UTC(NBS). This very regular, sinusoidal variation typically shows a peak-to-peak magnitude of 10 to 30 microseconds during a period of one day (see the data plots discussed later in this section). It apparently reflects some combination of imperfections in the tracking data and the processing of these data by the GTDS program. The fact that the diurnal variations do not usually exceed this range gives us some confidence in the capabilities of GTDS to perform at the 100 microsecond level or

better. Also, for a period of about one year we had regular opportunities to compare the time code performance when two different versions of GTDS were used to generate the path delay corrections. Although the two versions (one at NBS/Boulder and the other at NOAA/Suitland) were obviously very similar in many ways, they had been independently adapted for different mainframe computers and operating systems. Generally, the NOAA/Suitland results seemed to show somewhat lower diurnal variations, but the actual computed path delays agreed to within at least 20 microseconds. Finally, our observations over many years show no long-term systematic drifts in the values of GOES time code versus UTC(NBS), suggesting that any errors being introduced into the path delay computation process are at least not time dependent in any significant way.

4) Transponder Delays. The time code signals are transmitted to the GOES satellites from Wallops Island at S-band, changed in frequency to the downlink frequency of about 469 MHz, and retransmitted to the earth. The processing of the signals through the satellite transponders and antenna systems results in some additional time delay. Although the transponder delays are known from pre-launch measurements on the ground and could, in principle, be treated as a separate correction to be applied to the received data, it is generally easier and more practical to consider them as part of the overall equipment delays which can be estimated by comparing the received time code initially with a known timing reference at the user's site. Experience indicates that such delays can be considered as a constant correction over long periods without introducing significant errors.

5) Ionospheric/Tropospheric Effects. As the time code signals pass through the ionosphere and atmosphere they are subjected to various perturbations relative to a totally free-space path. These effects have been thoroughly studied and documented in the radio propagation literature. For the frequency range of interest, the typical paths used, and the overall accuracy level of interest with the GOES time code, these effects can be considered negligible.

6) Receiver Delays. The receiving equipment commonly used with the GOES time code signals introduces additional delays into the signal path. These delays are usually measured for each receiver at time of manufacture and compensated for by setting switches in an appropriate delay-compensation circuit. Provisions and measurement instructions are usually included with the receiver to permit the user to check, and if necessary, readjust the delay compensation. Comparisons made on many different receivers at NBS suggest that the uncertainties associated with the manufacturers' delay determinations may be as high as 30 microseconds and are also somewhat dependent on received signal strength and ambient temperature. For most applications these delays may be treated as constant in time.

7) Measurement Uncertainties. Typical applications of the GOES time code involve the measurement of the time difference between the received GOES time code reference and a local clock pulse. Although the resolution of such a measurement can easily be maintained at better than 1 microsecond with simple equipment, there are much larger uncertainties introduced by the rather limited bandwidth occupied by the time code signal. For the typical signal-to-noise ratios available and a 100 hertz data rate for the time code, fundamental considerations lead to uncertainty levels of about 10 microseconds. This is borne out by the observed scatter of successive measurements of the received time code, using two identical, collocated receivers in the NBS laboratory.

D. Summary of Performance-Monitoring Data

In view of the extreme complexity of the overall GOES time code dissemination system and the difficulties discussed above associated with establishing valid statistical uncertainties for the various components of the system, the best estimate of actual system performance achieved is obtained from monitoring data collected at a variety of sites. Since the ultimate objective of this service is to provide UTC(NBS) at each user's site, one need only to receive the GOES time code at various geographical locations where a reference standard with a known relationship to UTC(NBS) is available and to monitor the time difference between the received GOES signal and the known reference. The degree to which the received signal agrees with UTC(NBS) is a measure of the overall uncertainty of the dissemination system, taking into account all the delays and uncertainties described previously. The degree to which the observed time difference, if any, remains constant with time is a measure of the overall system stability performance.

Monitoring sites currently include: the main facility at NBS in Boulder, CO; the backup operations control facility at the NBS radio station site in Ft. Collins, CO; the U.S. Naval Observatory in Washington, DC; and the NBS WWVH radio station site on the island of Kauai, HI. Monitoring data from these sites are regularly accessed from Boulder, analyzed, and archived in permanent computer files. Periodically, these results are compiled and published to document the performance of the GOES time code system. One example can be found in Reference [4].

Figure 4 is a plot of the observed daily averages of UTC(NBS)-GOES/East over a period of about 4 years where no corrections have been made for satellite position variations. The sudden shift in the time code data of about 1 millisecond near day number 1200 is not an actual change in the received data but rather reflects a modification to the receiver at NBS which resulted in a significantly different delay. This instrumentation effect could be corrected for but has not been in this plot. This time code performance is typical of that observed by users with receivers that do not make use of the transmitted satellite position information. The conclusion is that the received code can be considered as a reasonable representation of UTC(NBS) to within about 1 millisecond as long as a constant correction is applied to all data for the user's approximate geographical location. The obvious lack of a long term drift of the GOES time signal with respect to UTC(NBS) speaks well for the

capabilities of the responsible agencies in maintaining good satellite stationkeeping operations.

Figure 5 presents data for a corresponding period of about 4 years, but in this case the received data represent daily averages of UTC(NBS)-GOES/East after corrections are applied for satellite position variations. These data are typical of what a user would observe with an automatic receiver that decodes the satellite position information in the time code, computes path delay corrections, and continually adjusts the output 1 Hz reference signal to remain close to UTC(NBS). Although it is apparent from the plot that occasional brief periods exist (such as at times of satellite maneuvers) when the received time signals depart from UTC(NBS) by 100 microseconds or more, the great majority of the data fall within a 50 microsecond range with respect to UTC(NBS).

An analysis of similar monitoring results as obtained from different geographical locations, such as Washington, DC, and Hawaii, shows conclusively that the overall system performance does not depend significantly on the particular geometry involved. In other words, the GTDS program is very effective in computing the proper satellite positions which, in turn, can be used by the receiver algorithms to compute accurate path delays to any location. From many years of such observations we feel safe in considering the overall system accuracy to be within 100 microseconds, excluding the relatively brief periods covering special situations such as satellite maneuvers. Users are cautioned about these "abnormal" periods by a variety of means, including published information about the GOES system, announcements in the monthly Time and Frequency Bulletin, special alerts updated as often as necessary in the GOES status information file maintained by NBS in the U.S. Naval Observatory's Automated Data Service computer system, and designated accuracy indicator bits in the time code message.

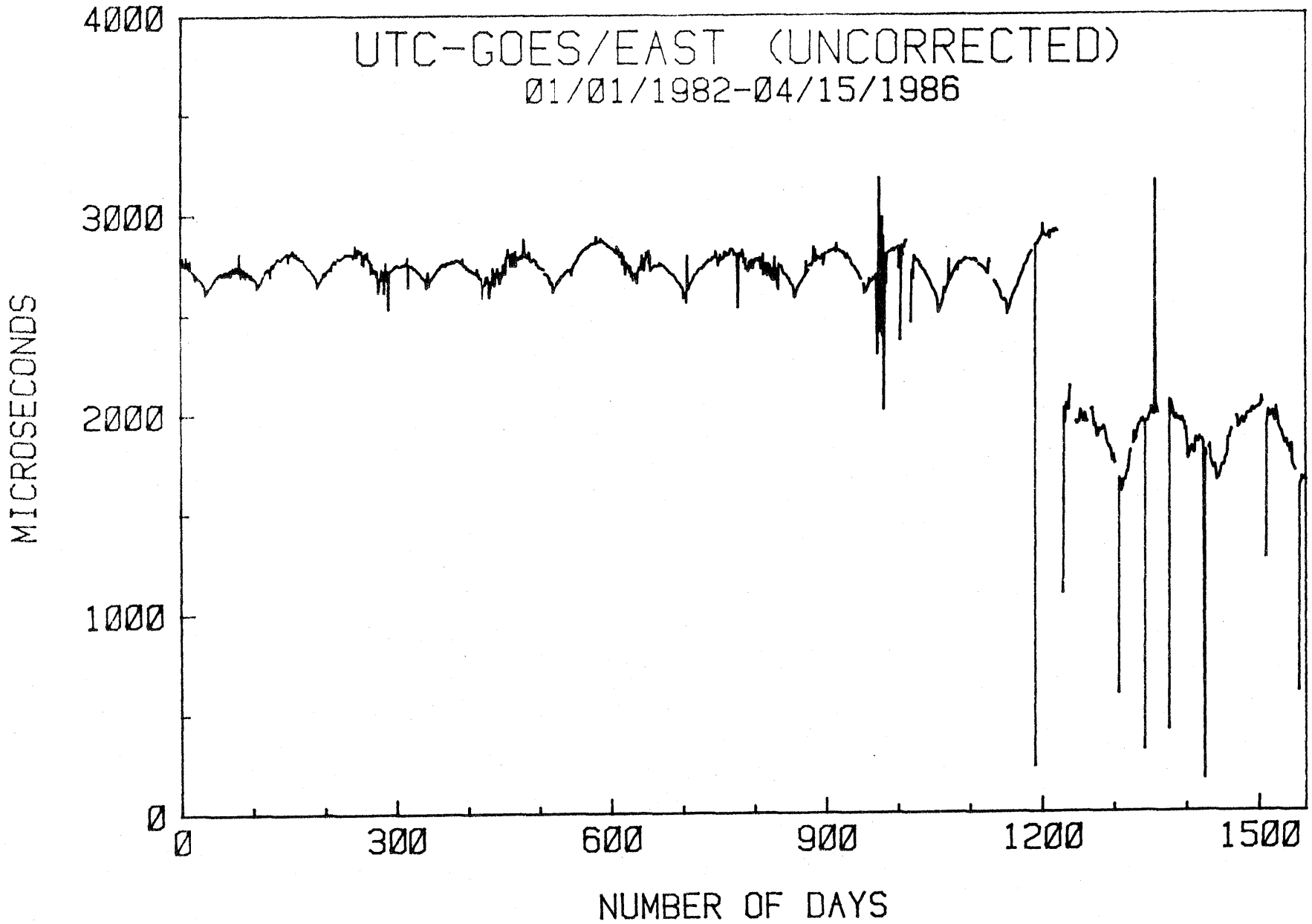
UTC-GOES/EAST (UNCORRECTED)
01/01/1982-04/15/1986
MICROSECONDS
4000
3000
2000
1000
0
0
300
600
900
1200
1500
NUMBER OF DAYS

Figure 4

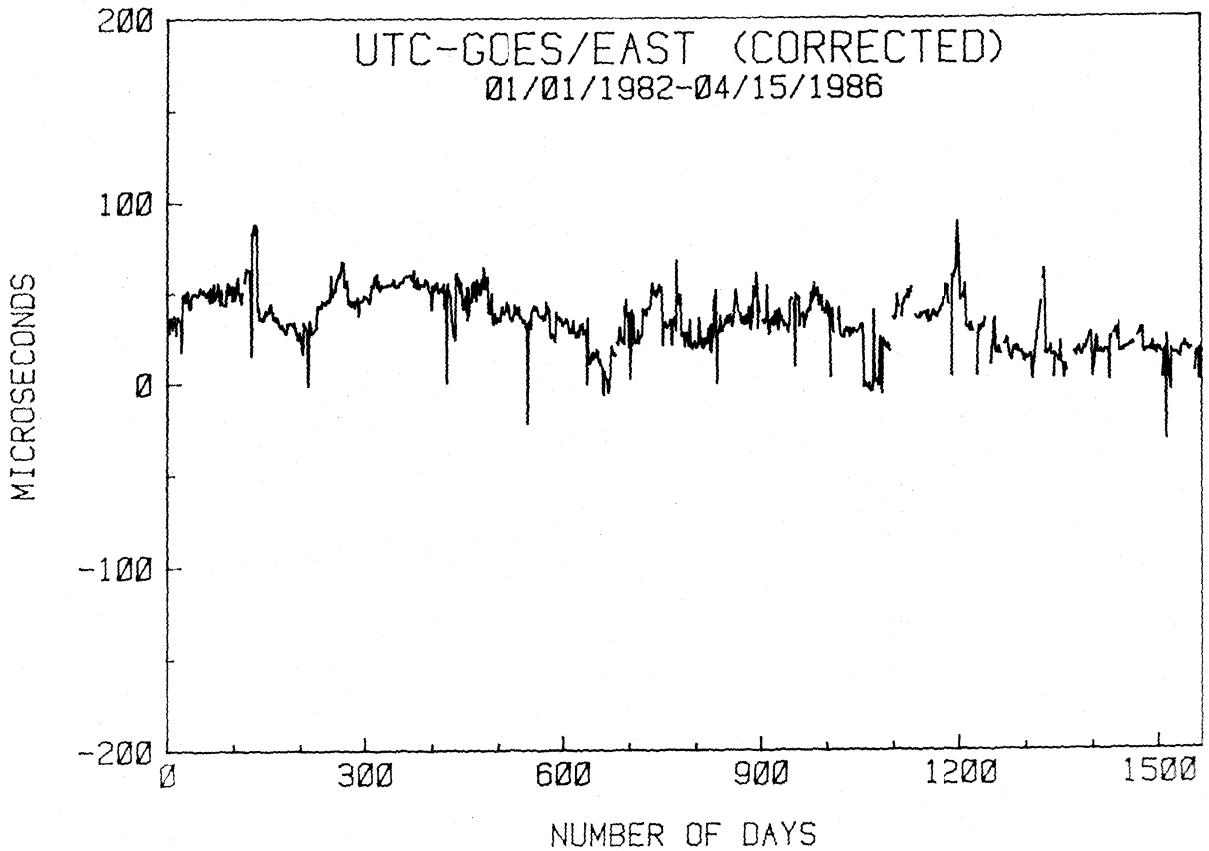
UTC-GOES/EAST (CORRECTED)
01/01/1982-04/15/1986
200
100
0
-100
-200
MICROSECONDS
0
300
600
900
1200
1500
NUMBER OF DAYS

Figure 5

GOES SATELLITE TIME CODE DISSEMINATION:
DESCRIPTION AND OPERATION

6. INTERNAL QUALITY CONTROL

A. Monitoring at Wallops Island for Internal Quality Control

In order to insure that the operating cesium standards and their associated time code generator outputs remain within a few microseconds of UTC(NBS) at all times, the 1 Hz outputs of the time code generators are monitored with respect to both Loran-C and the GPS satellite signals. For Loran-C a commercial timing receiver is used and the differences between each time code generator and an appropriate Loran-C signal from the receiver are measured once each hour and stored in the Wallops Island data logger system. Measurement resolution is a small fraction of 1 microsecond. Since the Loran-C delay was previously calibrated by portable clock comparisons and since Loran-C system time is accurately known with respect to UTC(NBS) at all times, these data provide a reliable link from the time code generators to UTC(NBS). Even though the various Loran-C transmissions may depart from UTC(NBS) by a microsecond or so on occasion, they are constrained through their control links to UTC(USNO) such that any difference is bounded. Thus, a measurement of the NBS time code generators versus Loran-C can generally be relied upon to within at least a few microseconds. One operational difficulty, however, is that re-establishing proper operation of a Loran-C receiver after a malfunction is a complex task, not easily performed by the NOAA Wallops Island staff, who are not time and frequency specialists. The result is that once the Loran-C receiver becomes disabled for any reason, it may remain out of service for some time before someone who can set it up again for proper operation becomes available.

In recognition of the potential difficulties with Loran-C, NBS established during 1985 an alternative monitoring system based on reception of the timing signals from the Global Positioning Satellite System. Since the GPS timing receiver was designed and constructed by NBS, there are ample servicing and replacement possibilities. The GPS receiver is fully automatic and operates for many months without attention. The receiver measures nominally ten GPS satellite passes each day and for each one stores a 13-minute average of the time difference between the GPS signal and the local time reference which is essentially the 1 Hz output from the on-line time code generator. The time differences typically have associated with them a standard deviation of 5-10 nanoseconds. Each GPS satellite timing signal contains information providing the predicted difference between that signal and GPS system time, which is known in terms of UTC(NBS) to within an accuracy of about 50 nanoseconds. Thus, this monitoring operation provides a convenient way to keep track of the time code generator outputs relative to UTC(NBS) to an accuracy that is much better than that of the overall GOES timing system.

The time code generator measurements in terms of Loran-C and GPS are accessed from Boulder and Ft. Collins several times per week using the normal dial-up data link to Wallops Island. Adjustments are made as necessary to keep the

on-line time code generator within a few microseconds of UTC(NBS). In addition, automatic alarm circuits continuously monitor the internal time differences between pairs of time code generators and generate warnings if any of these measurements exceed a preset limit (usually about 15 microseconds). Since alarms cause audible warnings to the Wallops Island staff who immediately contact NBS on a 24-hour-per-day basis, any timing errors are usually corrected promptly. Experience has shown that such errors are unlikely to occur more than once or twice per year.

B. Monitoring of Received GOES Signals Versus UTC(NBS)

The primary means for insuring that the GOES time code signals remain within specified limits with respect to UTC(NBS) is the continuous monitoring and measurement of the received signals at several locations having access to a good approximation to UTC(NBS). At NBS/Boulder signals are received continuously from both the East and West satellites, using an ensemble of six or more receivers. The data are recorded on strip chart recorders for easy visual monitoring and stored in a system of redundant data loggers. The measurement reference in the Boulder system is one of the clocks in the UTC(NBS) time scale system, thus providing a direct link to UTC(NBS). Twice each week the data logger data are analyzed for proper system operation, plotted as appropriate for permanent records, and then transferred to redundant computer disk files for archival purposes.

To further insure proper system performance a special time code decoder system in Boulder continuously monitors and displays all received bits in the received time code, including position data, DUT1 correction, daylight savings time and leap second status, the transmitted accuracy indicators for each satellite, the on-line time code generator identifier, and diagnostic indicators concerning any alarm conditions in the Wallops Island time code generation system. Finally, a visual display of the 100 Hz clock and data signal components from several of the monitoring receivers is available as an indicator of local interference conditions and coarse signal parameters.

A smaller version of this monitoring system is also maintained in Ft. Collins to provide an independent capability for assessing system performance. The reference for this system is the local UTC time scale used to generate the transmitted signals for radio stations WWV and WWVB. This local UTC system is kept synchronized to UTC(NBS) by continuous automatic monitoring of GPS satellite signals and regular comparisons with the corresponding measurements being made in terms of UTC(NBS) at Boulder. A special GOES time code monitor and alarm generator has been designed, constructed, and placed into operation by the Ft. Collins staff at the radio station site. This system generates an alarm condition if the received time code signal deviates from the local reference time scale by more than a selected number of microseconds and remains outside these limits for longer than a selected amount of time. Any alarm that is generated is interfaced with the station's normal alarm-monitoring system which causes a staff member to be notified of problems on a 24 hour per day basis.

Primarily as an aid in detecting any geographical dependencies that might creep into the GOES timing system, simple automatic monitoring systems are

also maintained in Washington, DC (for GOES/East) and at NBS radio station WWVH in Hawaii (for GOES/West). The Washington, DC monitoring data can be related easily to UTC(NBS) using UTC(USNO) as a transfer standard. The Hawaii data are measured in terms of the local WWVH UTC time scale system, which is linked back to UTC(NBS) by regular GPS satellite comparisons.

C. Experience With the Internal Quality Control Mechanisms

Continuous monitoring of the received GOES time code signals has been carried out in one form or another since the inception of the service in May 1974. The results show that, for the vast majority of the time, users have had access to these reference signals at accuracies of better than 1 millisecond (when corrections are not applied for path delay variations) or 100 microseconds (when corrections for path delay are applied).

Keeping the time code generators at Wallops Island within a few microseconds of UTC(NBS) has not proved to be a problem. The combination of cesium-standard stability, reliable external checks against Loran-C and GPS, and redundant automatic alarm systems has served well in this regard. On the rare occasion when a cesium standard or time code generator has failed suddenly, it has only taken a few minutes to have the Wallops Island station staff reconfigure the system to use a different on-line time code generator system.

Experience has shown that the major cause for time code deviations exceeding normal limits is the eclipse operations conducted during 45-day periods in the Spring and Fall of each year. With the transfer of time code operations on one or both GOES satellites to a spare satellite for two hours each day most users experience either loss of signal or substantial time shifts. Although NBS began transmitting correct position data (for the spare satellite) during these eclipse periods a few years ago, many receivers apparently do not automatically lock on to this satellite and therefore produce relatively large errors. As discussed earlier, however, this problem has apparently been eliminated as of Fall 1987 due to the use of newer version satellites that do not require switching to standby spacecraft during eclipse periods.

The next most serious problem has turned out to arise from operations at times of satellite maneuvers. The limitations in our version of the GTDS program used to generate the new position predictions that prohibit the updates from becoming available to the users until the start of the next day after the maneuver sometimes result in time code errors building up to several hundred microseconds for several hours after a maneuver. This type of problem occurs on the average of once every few months. On more infrequent occasions the post-maneuver predicted orbital elements supplied by NOAA prove inadequate for the new orbit and time code errors of several hundred microseconds might then persist for 4-7 days until new tracking data becomes available.

On one or two occasions over the past five years there have been extended outages of the time code lasting for 1-24 hours due to complete loss of electrical power at NOAA's Wallops Island facility. This type of occurrence is beyond our control and, in principle, is very unlikely to reoccur since the facility is now served by an improved backup electrical power system. As an

added precaution, however, the NBS equipment at Wallops Island has been supplied with its own special battery backup power supply since mid-1987.

In general, the internal quality control procedures have proven effective and major changes and additions are not considered necessary. The reliability of the time code service has been maintained at a level consistent with the other related NBS services such as WWV, WWVB, and WWVH.

7. FUTURE PROJECTIONS

A. Projections for the GOES Satellite System

As of October 1987 the future of the GOES satellite system appears to be secure until at least the mid-1990's. This assessment is based on several current factors. First, NOAA has announced launch schedules and procurement actions that will provide replacement satellites throughout that time period. The present GOES/East and GOES/West satellites are relatively recent versions.

NOAA has recently issued a final contract for the design and construction of the next group of three GOES satellites, which will be GOES-8, 9, and 10. Those satellites are scheduled to provide the operational services during the 1990-1995 period. Thus, from the point of view of the space segment NOAA has made a definitive commitment to continue the system for at least 8-10 more years.

A second indicator of NOAA's intent to continue the system is the current upgrade of the ground segment as it applies to the data collection system that also carries the NBS time code. Approximately, $5,000,000 is being invested in a major upgrade of the ground support facilities to enable the system to handle data from many more data collection platforms. The system currently is near saturation with more than 3000 data collection platforms in operation and a significant expansion in capacity has been proposed, justified, and funded. Although this upgrade does not directly impact our time code operations, it is a further indication that the overall GOES system is viewed as a valuable, long-term national resource.

B. Status of Formal NBS/NOAA Agreements

The joint effort involving NBS and NOAA to provide the NBS time code is formalized by a Memorandum-of-Agreement between the two organizations. It was originated in 1977 and signed by Dr. Ernest Ambler for NBS and Mr. David Johnson for NOAA. The agreement sets out the general responsibilities of each organization and states that the agreement remains in effect for a five or ten year period that can be extended with the agreement of both parties. The Memorandum-of-Agreement was so extended in 1982 for a five year period. In August 1987 it was again renewed by both organizations, this time for a ten year period until 1997.

C. NOAA Satellite Tracking Operations

Earlier in this report it was mentioned that NOAA revised its satellite tracking procedures about two years ago with some apparently negative impact on the NBS time code operations. In discontinuing the original trilateration technique and converting to a less precise angle-tracking method, NOAA has not been able to provide the same consistent high quality of their orbital

elements as previously. As a direct result of these changes in procedures, NBS degraded its accuracy-performance specification on the time code to 100 microseconds for applications in which the satellite position predictions are used to compute path delay corrections. More recent experience (1985-1987) has offered some optimism that the current techniques are being further refined and that the new tracking procedures may not cause as big a problem for the time code as previously thought. Although much more experience needs to be accumulated, it seems likely that the current tracking operations will continue to support a 100 microsecond accuracy specification with a good possibility of maintaining better than 50 microseconds most of the time.

D. Potential for Improvements to the Time Code Performance

Further improvements to the time code performance are likely to be rather minor in view of the built-in dependence on critical operations that are the responsibilities of other organizations. Since the time code operations are a relatively minor aspect of the overall GOES system operation, decisions on issues such as tracking techniques will continue to be made by NOAA based largely on only their own requirements. Although NOAA has been extremely cooperative in many operational aspects of maintaining the time code service, it is unrealistic to expect that NBS can have significant impact on future GOES developments.

With respect to the time code system itself there will be a continuing process of replacing and upgrading our own equipment from time to time as needs and opportunities arise. The current time code system at Wallops Island is basically a second-generation system and some ideas for the next generation equipment are already under consideration. The recent improvement to the monitoring capabilities through the use of GPS satellites appears to solve those requirements for as long as the GPS signals remain available to the civilian sector. Using GPS as a reference for the Wallops Island GOES system contains a certain aspect of overkill, since GOES does not require the better-than-100 nanosecond accuracy of GPS. However, this may turn out to be an advantage, because, if the GPS capabilities are intentionally degraded by DOD, the resulting accuracy will most likely still be sufficient for our needs with GOES.

In mid-1987 the sensitivity of the NBS equipment to electrical power outages at Wallops Island was reduced by installation of a dedicated, separate battery backup power system. This system can provide electrical power for the NBS standards, time code generators, and data loggers for several hours in the event of loss of NOAA's primary electrical power.

One current limitation, the inability of the NBS version of the GTDS program for satellite position prediction generation to process data for the actual day of a satellite maneuver, has been previously described. This prevents NBS from being able to insert updated position data into the time code system after a maneuver until 0000 UTC on the next day. Extensive efforts have been made by NBS in the past to isolate and correct the source of this computer programming problem, but they were unsuccessful. In the future, after the GOES system satellite configuration becomes more normal with the launch of new, replacement satellites, we should be able to bypass this problem by

accessing and using the satellite ephemeris files generated and maintained by NOAA in their Suitland, MD computer systems. This system normally contains post-maneuver data concurrent with the actual satellite maneuver and thus solves the problem at some slight cost of operational convenience. Some previous tests of these procedures prior to the partial equipment failures in GOES-4 and GOES-5 were very encouraging.

All new GOES satellites, starting with GOES-7, should have sufficient on-board reserve electrical power to carry the normal operations through the two-hour eclipse periods each day during the Spring and Fall eclipse periods. This improvement should eliminate one of the main operational inconveniences for some present users, the switching of at least the West time code back and forth to the spare satellite during eclipse periods.

GOES SATELLITE TIME CODE DISSEMINATION:
DESCRIPTION AND OPERATION

REFERENCES

[1] NBS Publication TFS-602, "NBS time via satellites," available upon request.

Hanson, D. W., Davis, D. D., and Cateora, J. V., "NBS time to the Western hemisphere by satellite." Radio Science, vol. 14, no. 4, 731-740.

[2] NBS Time and Frequency Bulletin (monthly), available upon request.

[3] Goddard Trajectory Determination System (GTDS): User's Guide, July, 1975.

Mathematical Theory of the Goddard Trajectory Determination System, April, 1976.

[4] Beehler, R. E., "GOES satellite time code dissemination," Proc. 14th Annual Precise Time and Time Interval (PTTI) Applications and Planning Meeting, December 1982, 57-87.