NBS Measurement Services:

Far Ultraviolet Detector Standards

NBS Special Publication 250-2

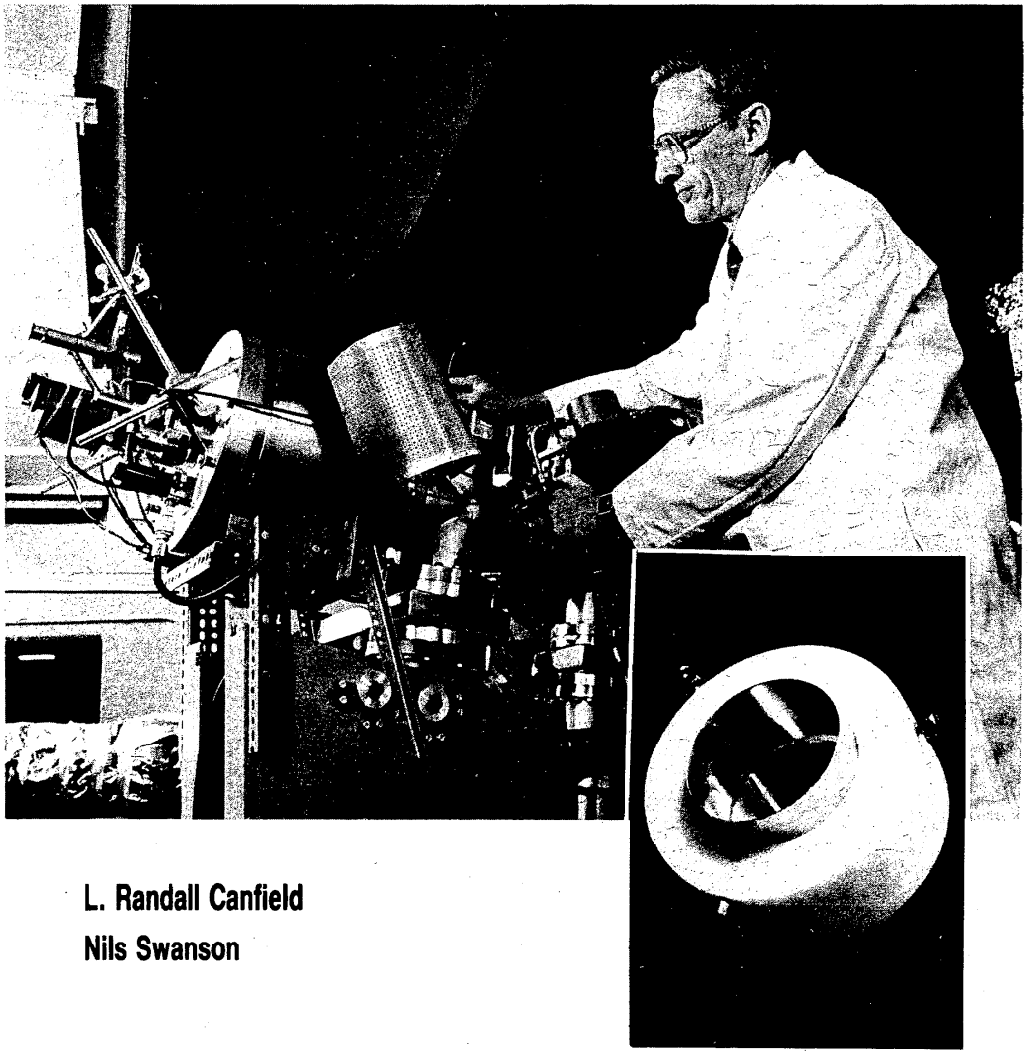

L. Randall Canfield

Nils Swanson

U.S. Department of Commerce

National Bureau of Standards

Center for Radiation Research

The Center for Radiation Research is a major component of the National Measurement Laboratory in the National Bureau of Standards. The Center provides the Nation with standards and measurement services for ionizing radiation and for ultraviolet, visible, and infrared radiation; coordinates and furnishes essential support to the National Measurement Support System for ionizing radiation; conducts research in radiation related fields to develop improved radiation measurement methodology; and generates, compiles, and critically evaluates data to meet major national needs. The Center consists of five Divisions and one Group.

Atomic and Plasma Radiation Division

Carries out basic theoretical and experimental research into the spectroscopic and radiative properties of atoms and highly ionized species; develops well-defined atomic radiation sources as radiometric or wavelength standards; develops new measurement techniques and methods for spectral analysis and plasma properties; and collects, compiles, and critically evaluates spectroscopic data. The Division consists of the following Groups:

- Atomic Spectroscopy
- Atomic Radiation Data
- Plasma Radiation

Radiation Physics Division

Provides the central national basis for the measurement of far ultraviolet, soft x-ray, and electron radiation; develops and disseminates radiation standards, measurement services, and data for for these radiations; conducts theoretical and experimental research with electron, laser, ultraviolet, and soft x-ray radiation for measurement applications; determines fundamental mechanisms of electron and photon interactions with matter; and develops advanced electron- and photon-based measurement techiques. The Division consists of the following Groups:

- Far UV Physics
- Electron Physics
- Photon Physics

Radiometric Physics Division

Provides national measurement standards and support services for ultraviolet, visible, and infrared radiation; provides standards dissemination and measurement quality assurance services; conducts research in optical radiation, pyrometry, photometry, and quantum radiometry; and develops spectroradiometric and spectrophotometric standards and calibration procedures. The Division consists of the following Groups:

- Spectral Radiometry
- Spectrophotometry
- Radiometric Measurement Services

Radiation Source and Instrumentation Division

Develops, operates, and improves major NBS radiation facilities including the electron Linac and race track microtron; develops, designs, and builds electronic and mechanical instrumentation for radiation programs and facilities; provides national leadership in the standardization of nuclear instrumentation; and develops new competence in radiation sources and instrumentation. The Division consists of the following Groups:

- Accelerator Research
- Linac Operations
- Electronic Instrumentation
- Mechanical Instrumentation

Ionizing Radiation Division

Provides primary national standards, measurement services, and basic data for applications of ionizing radiation; develops new methods of chemical and physical dosimetry; conducts theoretical and experimental research on the fundamental physical and chemical interactions of ionizing radiation with matter; provides essential standards and measurement support services to the National Measurement Support System for Ionizing Radiation; and develops and operates radiation sources needed to provide primary radiation standards, fields, and well-characterized beams of radiation for research on radiation interactions and for development of measurement methods. The Division consists of the following Office and Groups:

- Office of Radiation Measurement
- Radiation Theory
- Radiation Chemistry and Chemical Dosimetry
- Neutron Measurements and Researc
- Neutron Dosimetry
- Radioactivity
- X-Ray Physics
- Dosimetry

Nuclear Physics Group

Engages in forefront research in nuclear and elementary particle physics; performs highly accurate measurements and theoretical analyses which probe the structure of nuclear matter; and improves the quantitative understanding of physical processes that underlie measurement science.

NBS MEASUREMENT SERVICES: FAR ULTRAVIOLET DETECTOR STANDARDS

L. Randall Canfield

Nils Swanson

Center for Radiation Research
National Measurement Laboratory
National Bureau of Standards
Gaithersburg, MD 20899

U.S. DEPARTMENT OF COMMERCE, Malcolm Baldrige, Secretary
NATIONAL BUREAU OF STANDARDS, Ernest Ambler, Director
Issued June 1987

Library of Congress Catalog Card Number: 87–619832

National Bureau of Standards Special Publication 250-2
Natl. Bur. Stand. (U.S.), Spec. Publ. 250-2, 86 pages (June 1987)
CODEN: XNBSAV

Commercial products—materials and instruments—are identified in this document for the sole purpose of adequately describing experimental or test procedures. In no event does such identification imply recommendation or endorsement by the National Bureau of Standards of a particular product; nor does it imply that a named material or instrument is necessarily the best available for the purpose it serves.

U.S. GOVERNMENT PRINTING OFFICE
WASHINGTON: 1987

For sale by the Superintendent of Documents, U.S. Government Printing Office, Washington, DC 20402–9325

PREFACE

The calibration and related measurement services of the National Bureau of Standards are intended to assist the makers and users of precision measuring instruments in achieving the highest possible levels of accuracy, quality, and productivity. NBS offers over 300 different calibration, special test, and measurement assurance services. These services allow customers to directly link their measurement systems to measurement systems and standards maintained by NBS. These services are offered to the public and private organizations alike. They are described in NBS Special Publication (SP) 250, NBS Calibration Services Users Guide.

The Users Guide is being supplemented by a number of special publications (designated as the "SP 250 Series") that provide a detailed description of the important features of specific NBS calibration services. These documents provide a description of the: (1) specifications for the service; (2) design philosophy and theory; (3) NBS measurement system; (4) NBS operational procedures; (5) assessment of measurement uncertainty including random and systematic errors and an error budget; and (6) internal quality control procedures used by NBS. These documents will present more detail than can be given in an NBS calibration report, or than is generally allowed in articles in scientific journals. In the past NBS has published such information in a variety of ways. This series will help make this type of information more readily available to the user.

This document (SP 250-2), NBS Measurement Services: Far Ultraviolet Detector Standards, by L. R. Canfield and N. Swanson, is the second to be published in this new series of special publications. It covers the calibration of the quantum efficiency, or responsivity, of photodiodes over the wavelength range of 5 to 254 nm. Inquiries concerning the technical content of this document or the specifications for these services should be directed to the authors or one of the technical contacts cited in SP 250.

The Center for Radiation Research (CRR) is in the process of publishing 21 documents in this SP 250 series, covering all of the calibration services offered by CRR. A complete listing of these documents can be found inside the back cover.

NBS would welcome suggestions on how publications such as these might be made more useful. Suggestions are also welcome concerning the need for new calibration services, special tests, and measurement assurance programs.

George A. Uriano
Director
Measurement Services

Chris E. Kuyatt
Director
Center for Radiation Research

Far Ultraviolet Detector Standards

ABSTRACT: A description is given of the NBS program in which special photodiodes for the far ultraviolet spectral region (5-254 nm) are made available as transfer standards. These detectors are calibrated in terms of quantum efficiency (photoelectrons per incident photon) as a function of wavelength. Descriptions are also given of the calibration principles, calibration systems, and photodiode types involved in this program. Calibrations reference to the photoionization of rare gases.

Key Words: Far ultraviolet; photodiodes; photoionization; quantum efficiency; rare gases; standards.

TABLE OF CONTENTS

I Introduction 1

II Description of Service 2
- a. Background
- b. Goals
- c. Present Services
- d. Future Directions

III Description of Detector Types 4
- a. Windowless Photodiode Transfer Standard (5-122nm)
- b. Windowed Photodiode Transfer Standard (116-254nm)
- c. Rare Gas Ionization Chamber (absolute standard)
- d. Thermopile (working standard)

IV Calibration Techniques 20
- a. Calibration Principles
- b. Measurement Methods

V Calibration Systems 26
- a. SURF-II System
- b. Thermopile System
- c. Photodiode Intercomparison System

VI Treatment of Errors 45

VII Safety 47

VIII Customer Interaction 48

IX Acknowledgement 49

References & Bibliography 50

Appendices
- A. Sample Report of Test A-1
- B. Detailed Operation of SURF-II System B-1
- C. Detailed Operation of Thermopile System C-1
- D. Detailed Operation of Intercomparison System D-1

LIST OF FIGURES

		Page
Figure 1.	Photocathode anodizing arrangement.....	5
Figure 2.	NBS windowless far ultraviolet photodiode.....	7
Figure 2a.	NBS windowless photodiode cathode support.....	8
Figure 2b.	NBS windowless photodiode anode structure.....	9
Figure 2c.	NBS windowless photodiode main body.....	10
Figure 2d.	NBS windowless photodiode cathode support retainer.....	11
Figure 3.	Efficiency of typical NBS windowless photodiode.....	12
Figure 4.	EVSD photodiode.....	17
Figure 5.	Schematic of thermopile and ionization chamber.....	19
Figure 6.	Far ultraviolet detector calibration facility at SURF..	27
Figure 7.	Side view of SURF detector calibration facility.....	30
Figure 8.	Photoelectric loss of gold black thermopile coating....	32
Figure 9.	Schematic of thermopile data acquisition.....	34
Figure 9a.	Schematic of thermopile calibration system.....	35
Figure 10.	Duoplasmatron light source.....	36
Figure 11.	Schematic of thermopile.....	38
Figure 12.	Power supply for duoplasmatron.....	42
Figure 13.	Spatial uniformity of EVSD photocathode.....	44

I INTRODUCTION

Calibrated transfer standard detectors for the far ultraviolet are available from NBS to cover the spectral region 5-254 nm. These standards serve to enable one working with relatively monochromatic radiation in this region to determine the flux incident at an experiment without knowledge of the spectral characteristics of the source. Two detector types are available to cover this range: a windowless photoemissive photodiode for the region 5-122 nm, and a windowed photoemissive photodiode for the balance of the total region. The detectors have been extensively studied as regards radiometrically important parameters, such as spatial photocathode uniformity and temporal stability of photoemission. The probable errors are 8-15% in the 5-122nm windowless photodiode region and 6-10% in the 116-254nm windowed photodiode region.

All calibrations are based on the rare gas ionization chamber as an absolute detector. In the windowless region, working standards are calibrated directly against such a reference, while in the windowed region it is necessary to transfer the calibration derived from the ionization chamber in wavelength with the use of a special thermopile. The shortest portion of the windowless region involves the use of a beam line at the NBS electron storage ring facility, SURF-II, while the calibrations above 50 nm are conducted using plasma light sources in a laboratory environment.

Outgoing detectors are calibrated by direct intercomparison with pre-calibrated working standards, which are periodically recalibrated. Detectors for the windowless region are fabricated in-house, others are procured commercially.

It is anticipated that in the future all detector calibrations in the far ultraviolet at NBS may be based on the calculable flux at SURF-II, rather than rare gas ionization. This will entail the funding and development of a completely new system designed for this purpose, and would likely depend on the use of the present Beam Line 2 instrument calibration facility at SURF-II as well.

II DESCRIPTION OF SERVICE

a. Background

During the period 1955-1965 there occurred a rapid increase in interest in scientific activity in the far ultraviolet, primarily due to two developments. First, advances in both vacuum and optical technology had led to the development and manufacture of convenient instruments (spectrographs, monochromators, etc.) with which many new experiments could be successfully conducted in the far ultraviolet. Second, the accomplishment of operating spacecraft had provided the opportunity to pursue solar and astronomical studies beyond the absorption of the earth's atmosphere, hence into the far ultraviolet.

With the great increase in far ultraviolet activity came the parallel need for radiometric capability in this region. The situation became rather obvious when it developed that experiments orbiting on different spacecraft, but observing the same phenomena, were recording vastly differing flux levels. Clearly a common, accurate radiometric base was needed and NBS undertook the establishment of a program which would lead to transfer standard detectors for the far ultraviolet.

b. Goals

The far ultraviolet detector radiometry program attempts to furnish transfer standards capable of determining absolute flux levels in the spectral range 5-254nm. These standards should be relatively stable, simple to use, and within the typical laboratory budget. Calibrations furnished with these standards should be state-of-the-art in accuracy. Improvements in accuracy and stability should be constantly sought and incorporated when possible.

c. Present Calibration Services

Two detector types (described in III) are now available from NBS as calibrated transfer standards covering the spectral regions 5-122nm (probable errors 8-15%) and 116-254nm (probable errors 6-10%). Users are furnished with the quantum efficiency of their detector as a function of wavelength (with quantum efficiency defined as the number of photoelectrons per incident photon). A typical Report of Test is shown in Appendix A. Recalibration of each type is available after customer use.

Additionally, special detectors which do not lend themselves to convenient on-site cross-calibration may be calibrated at NBS if the detectors merit radiometric application and if the NBS facilities are suitable for the particular device.

The person to contact in regard to such calibrated detectors is:

Mr. L. R. Canfield
A-251 Physics Bldg.
National Bureau of Standards
Gaithersburg, MD 20899

d. Future Directions

It is hoped that eventually all far ultraviolet detector calibration activities can be conducted at the NBS Synchrotron Ultraviolet Radiation Facility (SURF-II), using its calculable flux as the radiometric base. This would eliminate the weakest link in the calibration chain, the thermopile, and might also lead to the elimination of the need for working standards. Even before this is achieved there are several areas in which improvements may be made. Materials studies may lead to windowless detectors with better spatial uniformity, temporal stability and improved quantum efficiencies. It is hoped that the short wavelength limit of calibrations can be extended and that the uncertainties of calibrations at all wavelengths can be reduced.

III DESCRIPTION OF DETECTOR TYPES

a. The NBS Windowless Photodiode (5-122nm)

The NBS Windowless Photodiode transfer standard detector is the result of temporal stability and spatial uniformity studies which were conducted at NBS in the 1960s on several likely choices for a photocathode material suitable for use in an open vacuum photodiode (1). The spectral region of interest was primarily at wavelengths shorter than the transmission limit of magnesium fluoride, so as to extend the range covered by sealed photodiodes.

1. Photocathode Material

The material of choice for the photocathode was and is aluminum with the natural oxide thickness artificially increased. Vacuum deposited aluminum (99.999% pure) samples on quartz substrates are anodized to increase the natural oxide thickness for use as photocathodes in NBS far uv windowless transfer standard photodiodes. The increased oxide (about 15nm thick) improves the stability of the photoyield over that of the deposited aluminum by preventing any further oxide development, and achieves more complete absorption of the incoming radiation, thus reducing wavelength-dependent variations in the photoyield caused by optical interference. (The aluminum has a very low coefficient of absorption in much of the spectral range and hence acts like a transparent film bounded on each surface by an absorbing film.) A description of the method used to accomplish this follows.

The anodizing method used has been described in the literature (a). The general layout of the components is shown in Fig.1. A pH 5.5 bath of tartaric acid is used and the cathode used in the bath is 99.999% purity aluminum. The bath is prepared by dissolving 3% (by weight) powdered tartaric acid in distilled water. The pH is measured and adjusted by the addition of small amounts of either extra tartaric acid or ammonium hydroxide, depending on whether more or less acidity is needed.

A simple Teflon fixture holds the sample in contact with a pure aluminum wire at the edge of the circular substrate, so that most of the sample may be lowered into the bath without wetting the contact point. Electrical connection is made to this wire (+) and to the cathode wire (-) from a well-regulated power supply which has been preset to 10.5v and current-limited to about 10ma.

The basic procedure is to lower the fixture into the bath until the liquid is just short of wetting the contact point, then connect the power supply and leave connected for 1 minute. At this time the cable is disconnected and the sample removed from the bath. Each sample is rinsed in distilled water to remove traces of the bath, dried by forced air or nitrogen, and finally baked at about 110 C for at least an hour. Each sample should be inspected for signs of blistering or any appearance less than a quality reflector and rejected if such signs are present. (This appearance is usually the result of insufficient cleaning of the substrate prior to deposition of the aluminum.)

a. G. Hass, "On the Preparation of Hard Oxide Films with Precise Control of Thickness on Evaporated Aluminum Mirrors", J.O.S.A. 39, 532 (1949).

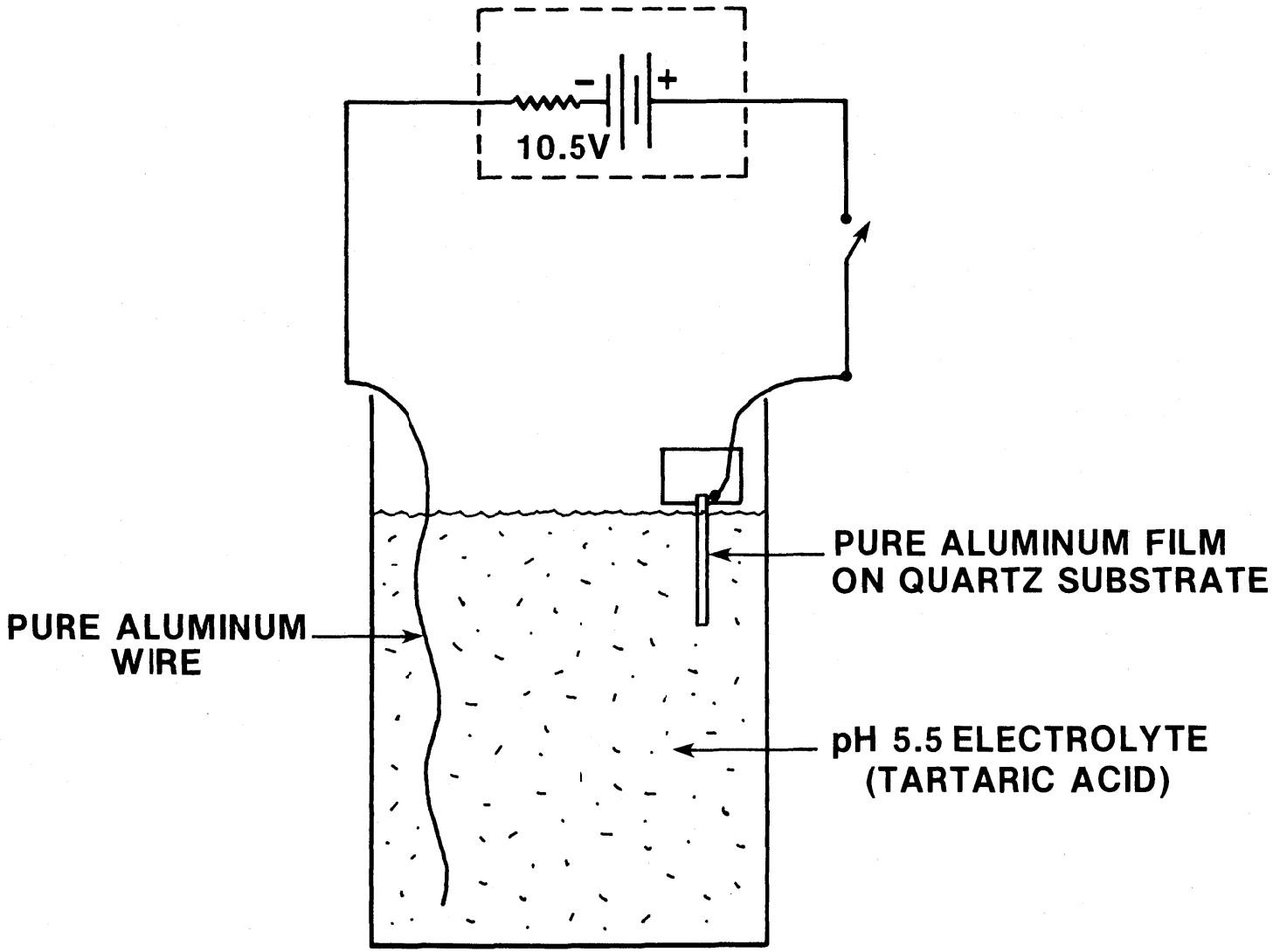

Figure 1. Photocathode Anodizing Arrangement

2. Photodiode Assembly

Figure 2 shows the configuration of this photodiode. A cylindrical anode is suspended very near the cathode, with a machined Teflon component providing support for both. The photocathode is electrically connected to a machined piece of aluminum on the opposite side of the substrate by aluminum foil. Provision for physical location of the whole device is made by a threaded hole in the rear of the machined aluminum piece. This mounting is at cathode potential and must be well insulated from ground. The entire device is intended for use in vacuum. A description follows of the steps in the assembly of a finished photodiode.

The NBS windowless photodiode assembly consists of four fabricated pieces plus the photocathode/substrate. Figures 2a-2d are the construction sketches from which the fabricated pieces are made. Not shown is a triangular piece of kitchen aluminum foil with a hole approximately 1 cm in diameter in the center. This piece is simply cut from bulk foil so that the corners of the triangle protrude 2-3mm beyond the cathode substrate.

Final assembly begins by placing the substrate, film side up, on the triangular aluminum foil previously prepared. The corners of this foil are bent over the edges of the quartz so that they will form redundant conducting paths to the rear of the substrate. The Teflon body piece is placed with the internal ledge facing up and the substrate placed on this ledge with the film side down.

The tapped hole in the aluminum backup piece must be staked before assembly to prevent a rear mounting screw from being driven into the cathode substrate. After the photocathode ID number is scribed on the rear of the substrate (in place), the backup piece is placed on the rear of the substrate, followed by the securing Teflon ring. The rear of the aluminum backup piece should also be scribed with the ID number. The final item of assembly is to secure the anode to the main body with 2-56 stainless steel screws at the three tapped holes provided. Store the photodiode in an ultra-high vacuum system or face down on a clean paper towel in a closed cabinet.

3. Operating Characteristics

Incident far uv photons cause the photocathode to emit low-energy electrons, which are accelerated away by the electric field established by the anode potential of 60-100V. The rate of emission is measured with a suitable calibrated picoammeter. The usable range of photocurrents is roughly from 10^{-9} to less than 10^{-15} amperes. (The "dark" current-mostly thermionic emission-is known to be less than 10^{-15} amperes, but has not been measured.) From a table of quantum efficiencies (electrons per incident photon) given in the NBS Report of Test which accompanies each photodiode (see Appendix A), the flux rate at the surface of the photocathode may be derived. Typical efficiencies range from a few percent at 5nm to a peak value of about 20 percent in the 60-70nm region, then back down to about 1 percent at 122nm (see Fig.3). The photocathode surface, being unprotected from outside contamination, may change in efficiency due to such exposure, so it is important that potential sources of contamination be recognized and controlled. One should also ensure that the photocathode is protected from

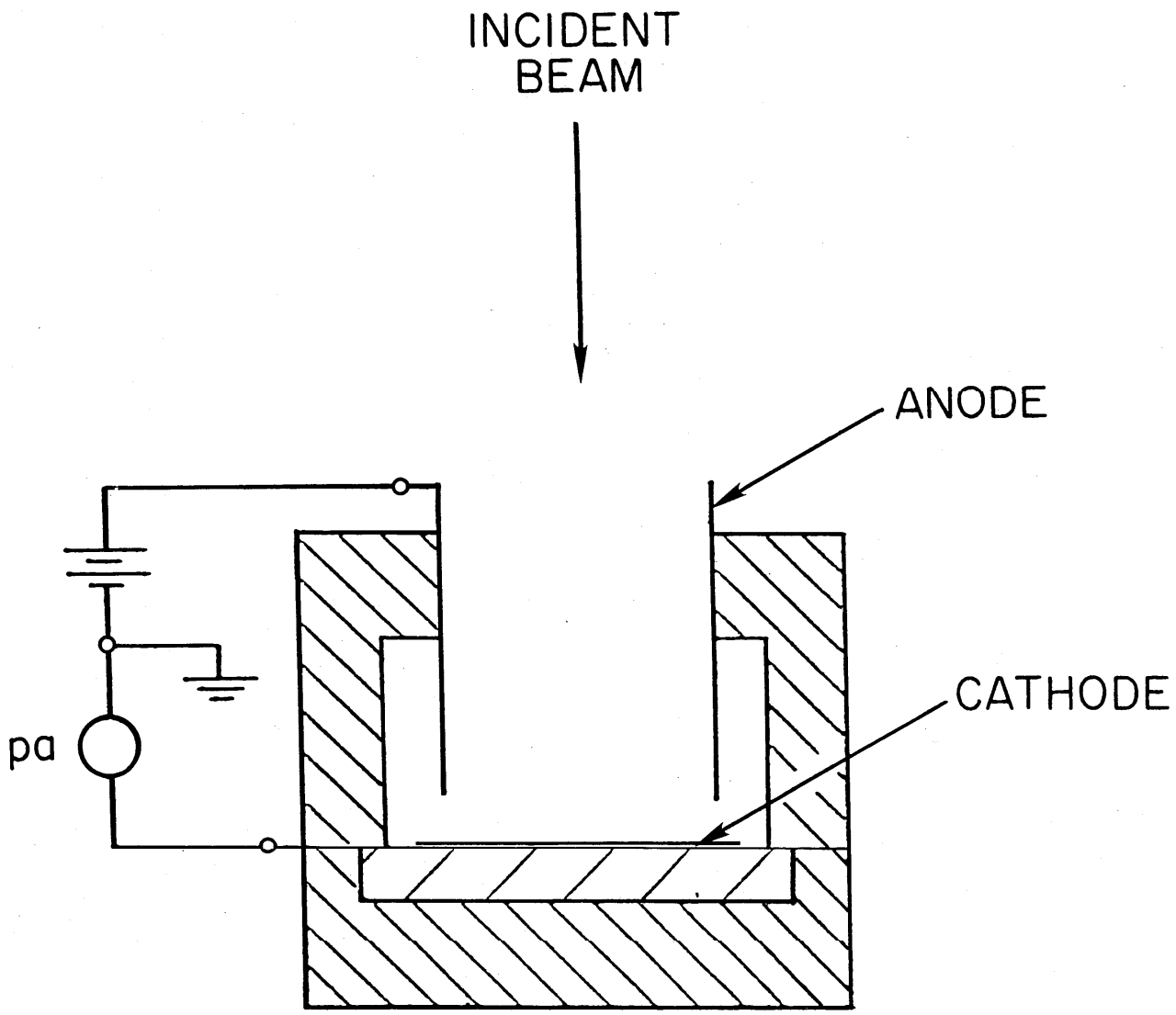

NBS PHOTODIODE (WINDOWLESS)
(5-122 nm)

Figure 2

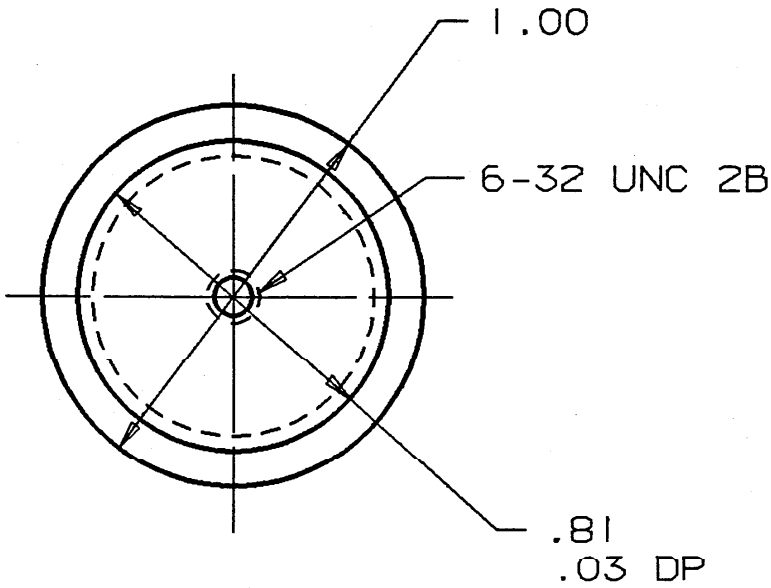

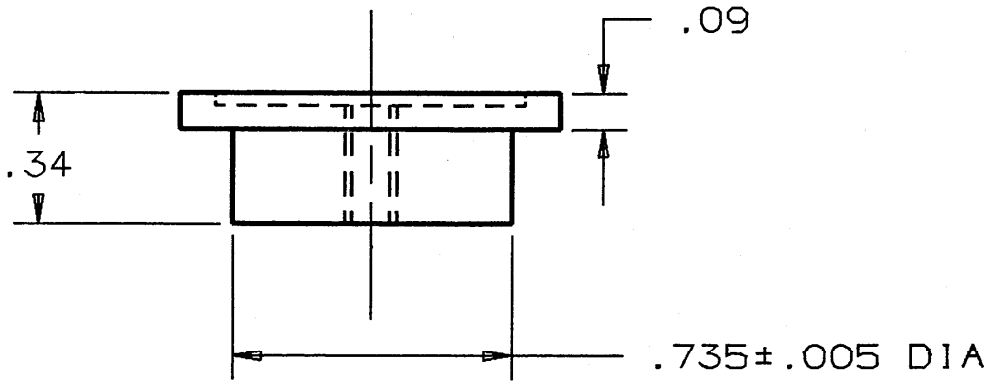

NOTES:

1. MAT: AL 6061
2. SCALE 2-1

FIGURE 2a

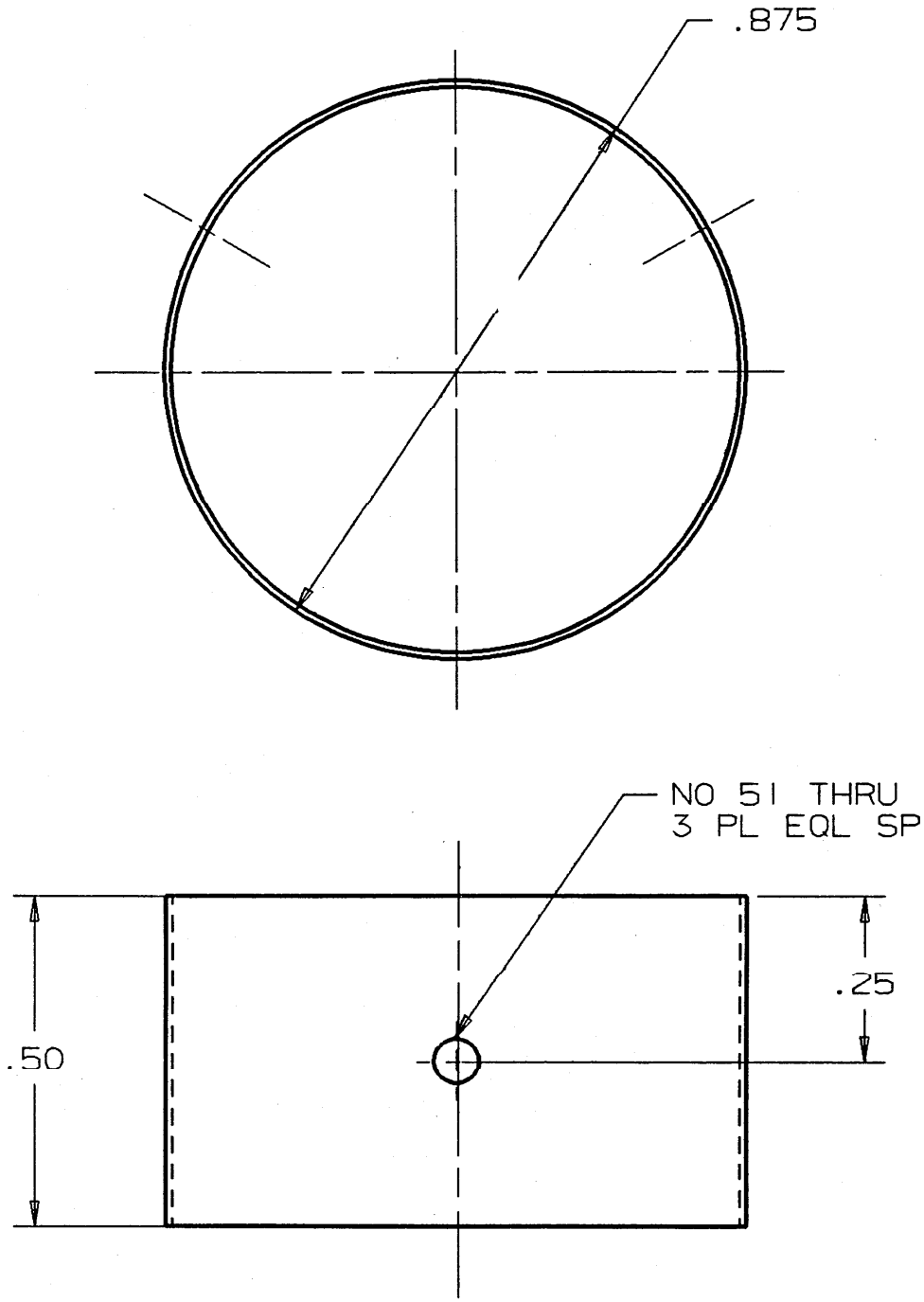

NOTES:

1. MAT: SS TUBING .010 WALL
2. SCALE 4-1

FIGURE 2b

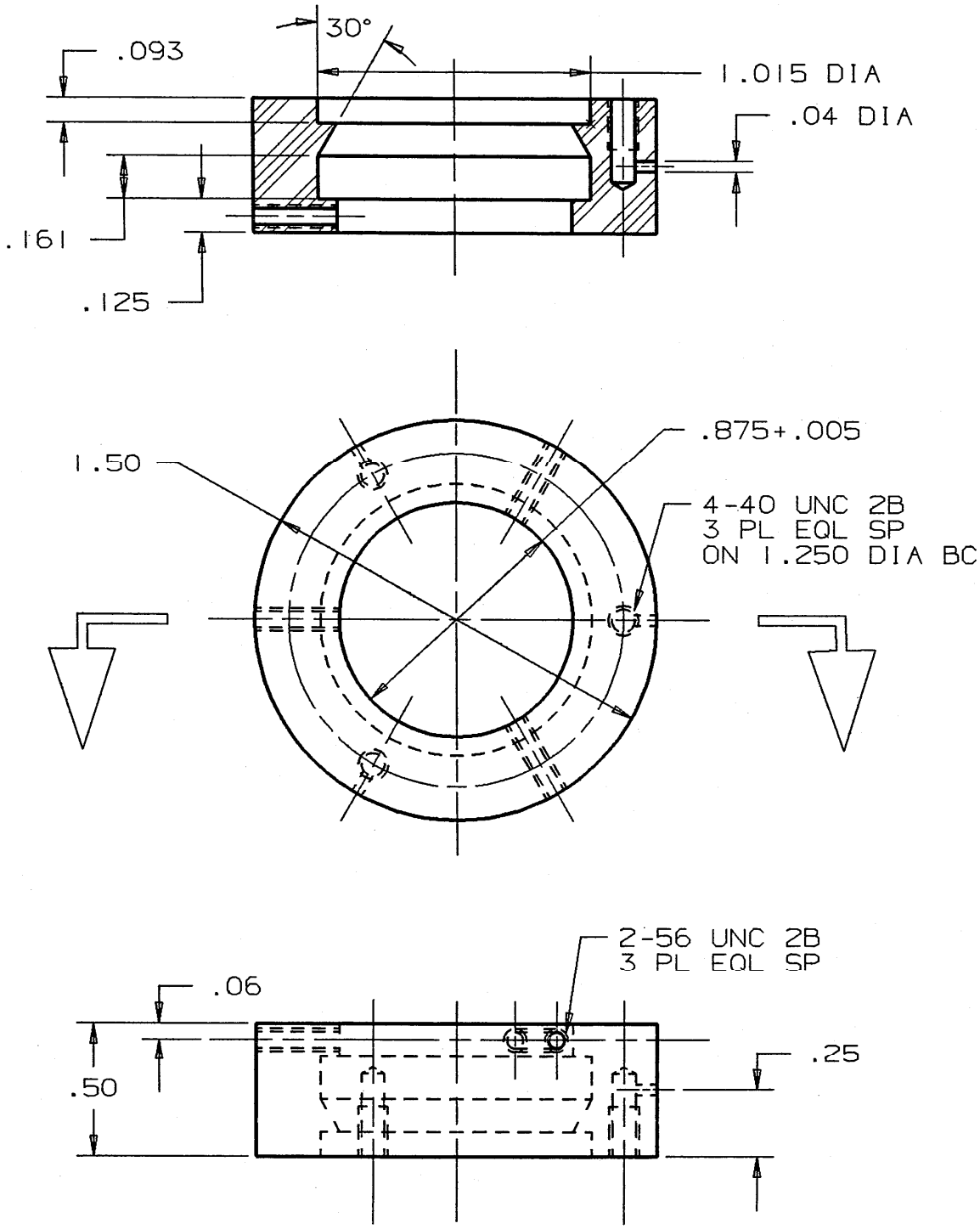

NOTES:
1. MAT: TEFLON
2. SCALE 2-1

FIGURE 2c

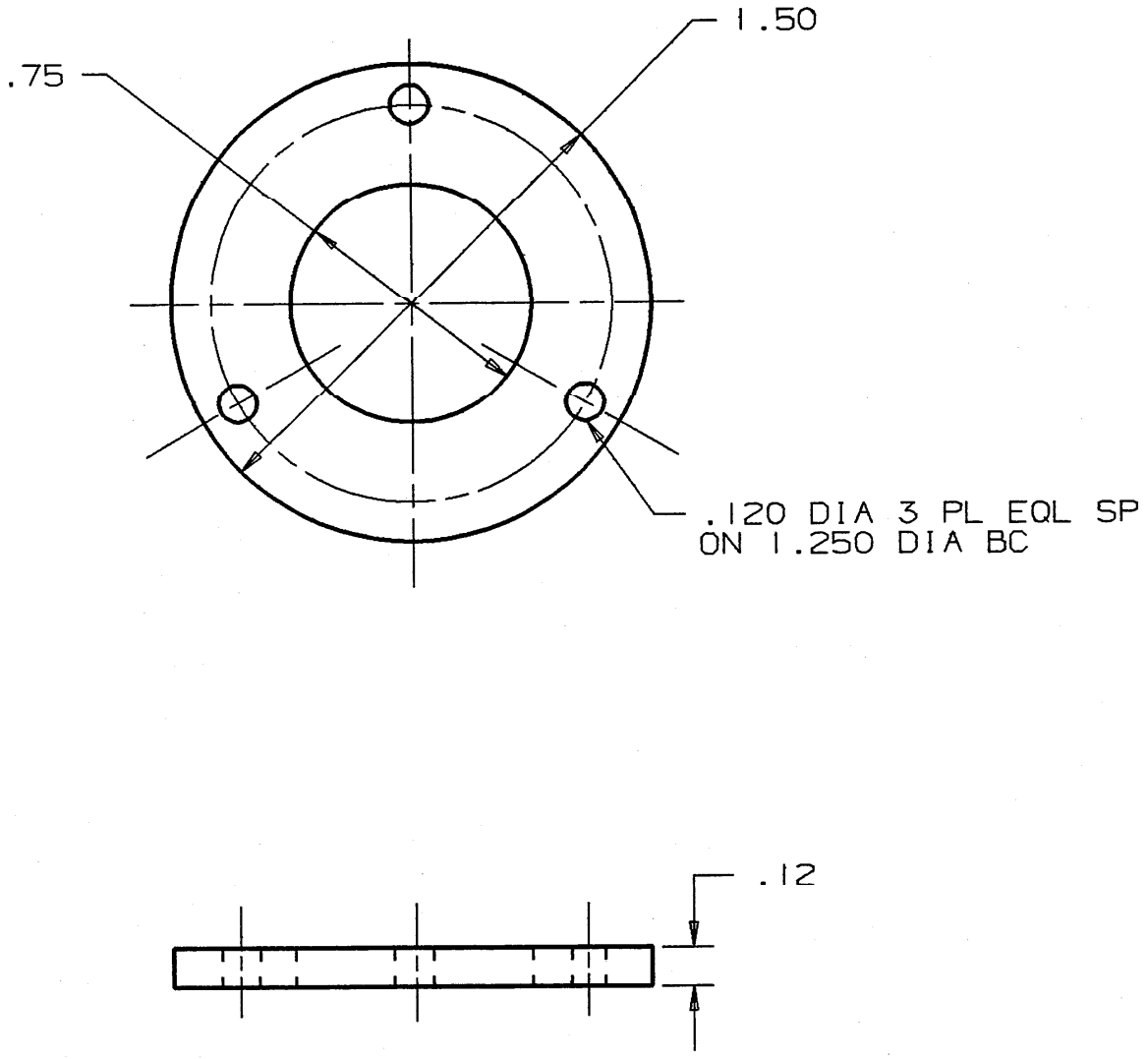

NOTES:
1. MAT: TEFLON
2. SCALE 2-1

FIGURE 2d

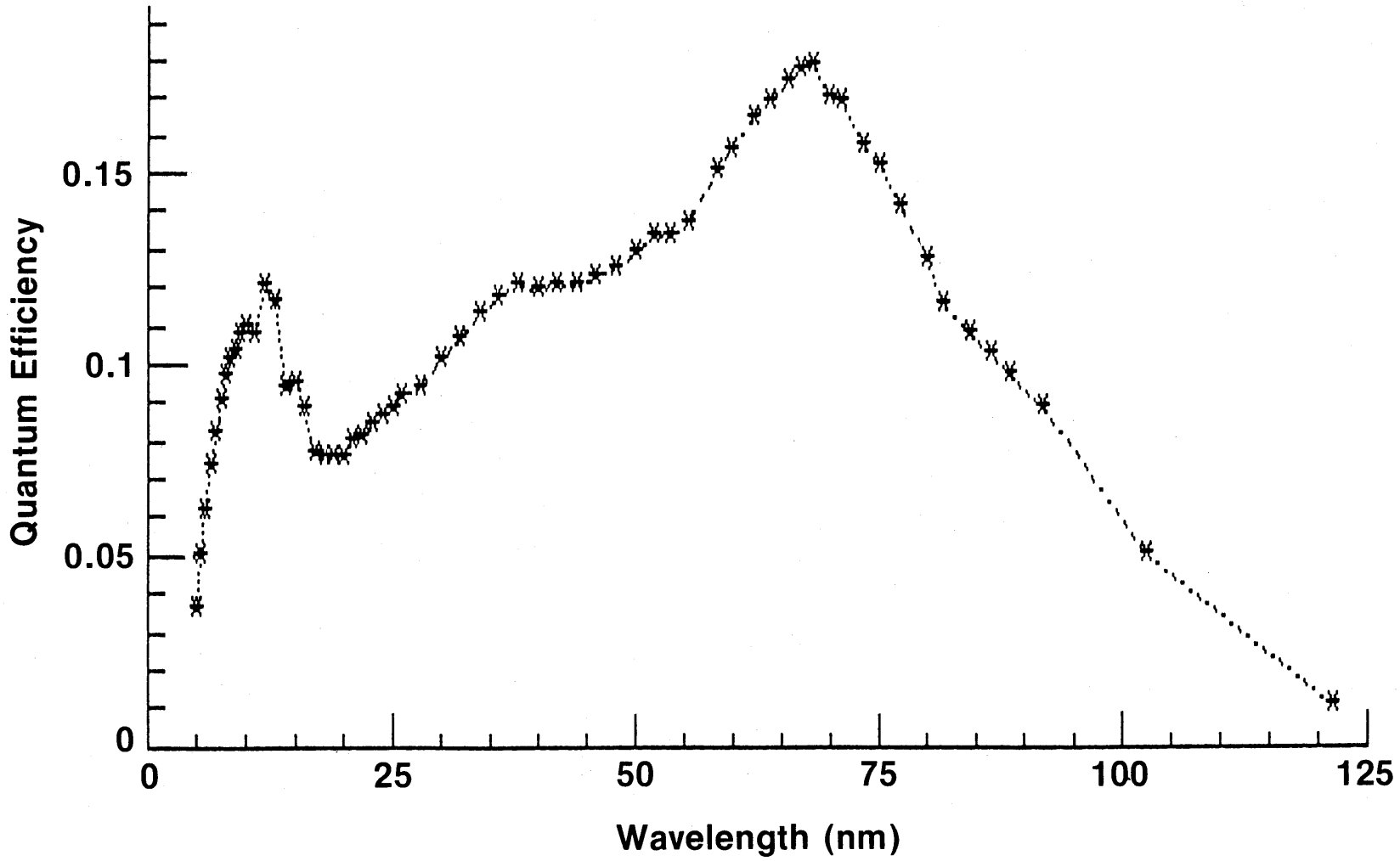
Quantum Efficiency
0.15
0.1
0.05
0
0
25
50
75
100
125
Wavelength (nm)

Figure 3

charged particles during operation, since any such particles arriving at the photocathode would result in an incorrect assessment of the radiant flux. The electrical characteristics and operational considerations on the following page are supplied with each outgoing new NBS photodiode.

OPERATING INSTRUCTIONS FOR NBS WINDOWLESS FAR UV TRANSFER STANDARD PHOTODIODES

The photodiode has two operating elements: the anode, which is the stainless steel cylinder projecting from the Teflon body, and the cathode, which is the mirror-like surface seen through the anode. The cathode consists of a quartz substrate supporting an aluminum evaporated film which has been anodized to an oxide thickness of approximately 150Å. The cathode is electrically in contact with the machined aluminum piece having the central tapped hole.

The anode should be operated at +60V (150Å-1216Å) or +100V (<150Å). Connection may be made by clip at any of the three screws which support the anode. Connection to the cathode must be made at the rear 6-32 tapped hole. Care must be taken to maintain a very high resistance path to ground at this point--Teflon insulation is recommended.

********** NOTE **********

The quantum efficiency of any open photoemitter may be altered by very small amounts of surface contaminants. In order to maintain the NBS calibration, it is imperative that the vacuum system in which the photodiode is used be well-trapped and free of contamination. It is most advisable to minimize the time which the photodiode spends in any oil-pumped system. Prolonged storage in an ultra-high (oil-free) vacuum system should not in itself present any problem. However, it has been found that users sometimes overlook the possibility that a nearby hot filament may deposit evaporated material onto the photocathode, or that cycling the vacuum system with voltage applied to the anode may result in contamination by sputtered material.

****

Charged particles reaching the photocathode will obviously result in spurious current readings. (A nearby ion gauge may well provide such particles!). If this is suspected, a guard of some sort may have to be used. The linearity of photocathodes of the type employed has been proven at photon flux levels to about 10E11/sec. Greater flux levels may require elevation of the anode voltage until plateau operation is obtained.
A significant percentage of the photoelectrons leaving the cathode will not reach the anode, hence the photocurrent measured should be the emitted (or cathode) current.
The efficiency of the photodiode at wavelength short of 50Å is not known, but the efficiency at wavelengths >1216Å should follow an extrapolation of the curve of q.e. vs wavelength for several orders of magnitude.

The diagram below depicts the wiring configuration used during calibrations at NBS.

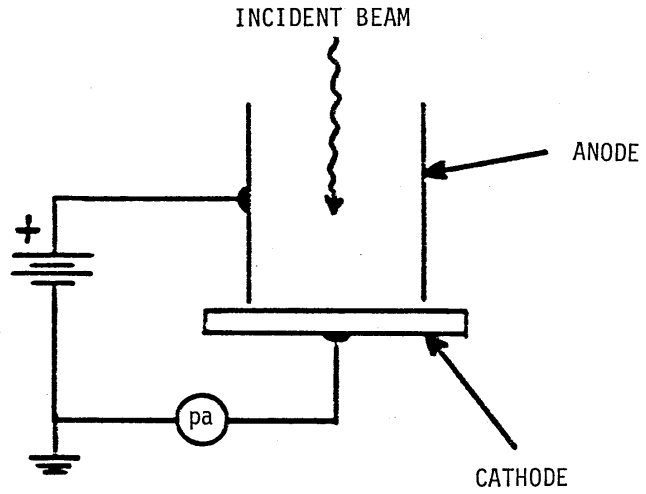

b. Windowed Photodiode (116-254nm)

During the history of the NBS far ultraviolet transfer standard detector program several suppliers of windowed detectors have been used. Initially satisfactory photodiodes were obtained from the Stanford Electronics Laboratory at Stanford University and from EMR Photoelectric in New Jersey, but in recent years both of these sources have ceased production of satisfactory devices. We now obtain windowed photodiodes from the Electronic Vision & Systems Division (EVSD) of Science Applications International Corporation, which acquired the necessary competence as a result of a NASA contract to fabricate Digicon detectors for use in spacecraft.

1. Physical Characteristics

The photodiode supplied by EVSD (Fig. 4) is known as their model 54-0-000 and utilizes a semi-transparent cesium telluride photocathode deposited on the inner surface of a magnesium fluoride window. The device is fabricated in ultra-high vacuum with the photocathode being formed remote from the photodiode body, and the window/photocathode joined to the body by an indium alloy seal in the same vacuum. The body is made of OFHC copper electrodes brazed to ceramic spacers, with the center electrode isolating the cathode from anode leakage, and the rear electrode serving as the anode.

2. Operating Characteristics

A supply of 150v is attached to the anode and a calibrated picoammeter measures cathode photocurrent. The center electrode is normally grounded. Maximum photocurrent should be kept at less than 10^{-8} amperes and the magnesium fluoride window must be maintained free of contamination. Frequent cleaning of the window may also degrade its transmittance, and should be avoided as a routine measure. The operational instructions on the following page are included with each new outgoing EVSD photodiode.

Instructions for using EVSD Photodiodes

The EVSD model 54-0-000 photodiode incorporates the following materials:

Window: Magnesium fluoride
Photocathode: Cesium telluride (on inside of window)
Window Seal: Indium alloy (melts at ~70C)
Tube Body: Alumina and OFHC copper, brazed

The photodiode should be operated entirely in vacuum with the anode +150V, guard grounded and photocurrent measured in the cathode circuit. The electrode nearest the window is the cathode. The magnesium fluoride window should not be cleaned routinely; if contamination is suspected, spectro grade acetone may be used with degreased cotton as a swab. We recommend storing the photodiode, when not in use, either in an oil-free vacuum system or face down in a relatively clean atmospheric environment, but not in an oil-pumped vacuum system.

Please remember that the window seal is an indium alloy bond, and exposure to temperatures of approximately 70C will cause seal failure and destruction of the photocathode.

Maximum total photocurrent should be kept below 1x10-7A. The possibility of damage from exposure to high intensity pulsed radiation has not been tested. Exposure to intense radiation at wavelengths short of the 1130A window cutoff can be expected to induce color centers in the window, which would reduce total device efficiency at some wavelengths. The efficiency at wavelengths above about 3000A can vary from tube to tube; if response to stray light in this region is important, it would be wise to investigate the particular tube.

The configuration of the photodiode is shown below.

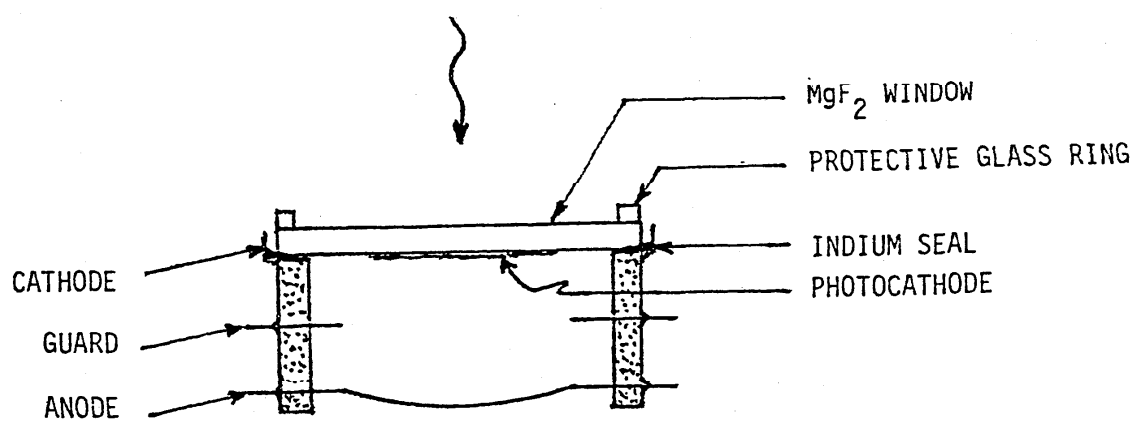

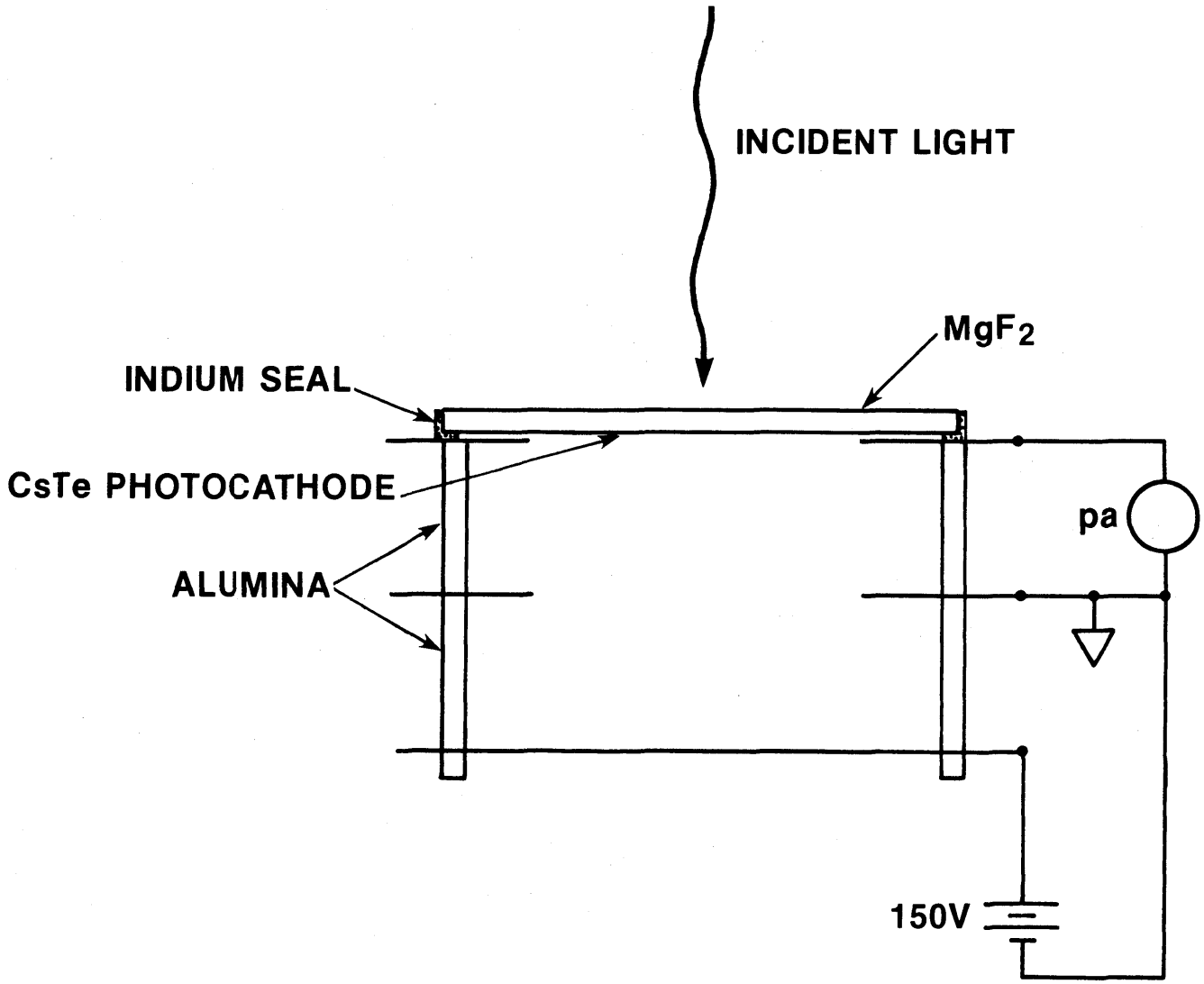
INCIDENT LIGHT
MgF_2
INDIUM SEAL
CsTe PHOTOCATHODE
ALUMINA
pa
150V

Figure 4

c. Rare Gas Ionization Chamber

The absolute detector which forms the basis for all present far ultraviolet detector calibrations at NBS is the rare gas ionization chamber. The basic operational principles and demonstration of the absolute nature of this detector have been discussed in the literature (2,3,5). The design used at NBS (seen in Fig. 5b) has two 10.16cm ion collector plates with a shorter guard plate at the rear to prevent field fringing in the ion collection region. The chamber which is used at wavelengths short of 58nm has the anode extended to very near the ion collectors to reduce the field acting on electrons resulting from ionization events (3). Direct calibrations of photodiodes are possible from 5-92nm.

d. Thermopile

A windowless thermopile (see Section IV) is used to transfer the capability of absolute detection by the ionization chamber to longer wavelengths. (In the region above 100nm the photon energy is insufficient to ionize any practical rare gas.) The thermopile employed is an extended junction, windowless device which uses very thin gold leaves coated with thin gold black to form a detecting area which is effectively much larger than the actual thermocouples. Such a detector is in no way absolute and must be calibrated by reference to an absolute detector, in our case, the rare gas ionization chamber. Detection of relatively weak uv energy with a thermal detector is extremely difficult, and to achieve reasonable signal-to-noise it is necessary to use ac phase-locked techniques. Further discussion of this application of a thermopile detector is given in Section V and in references in the Bibliography.

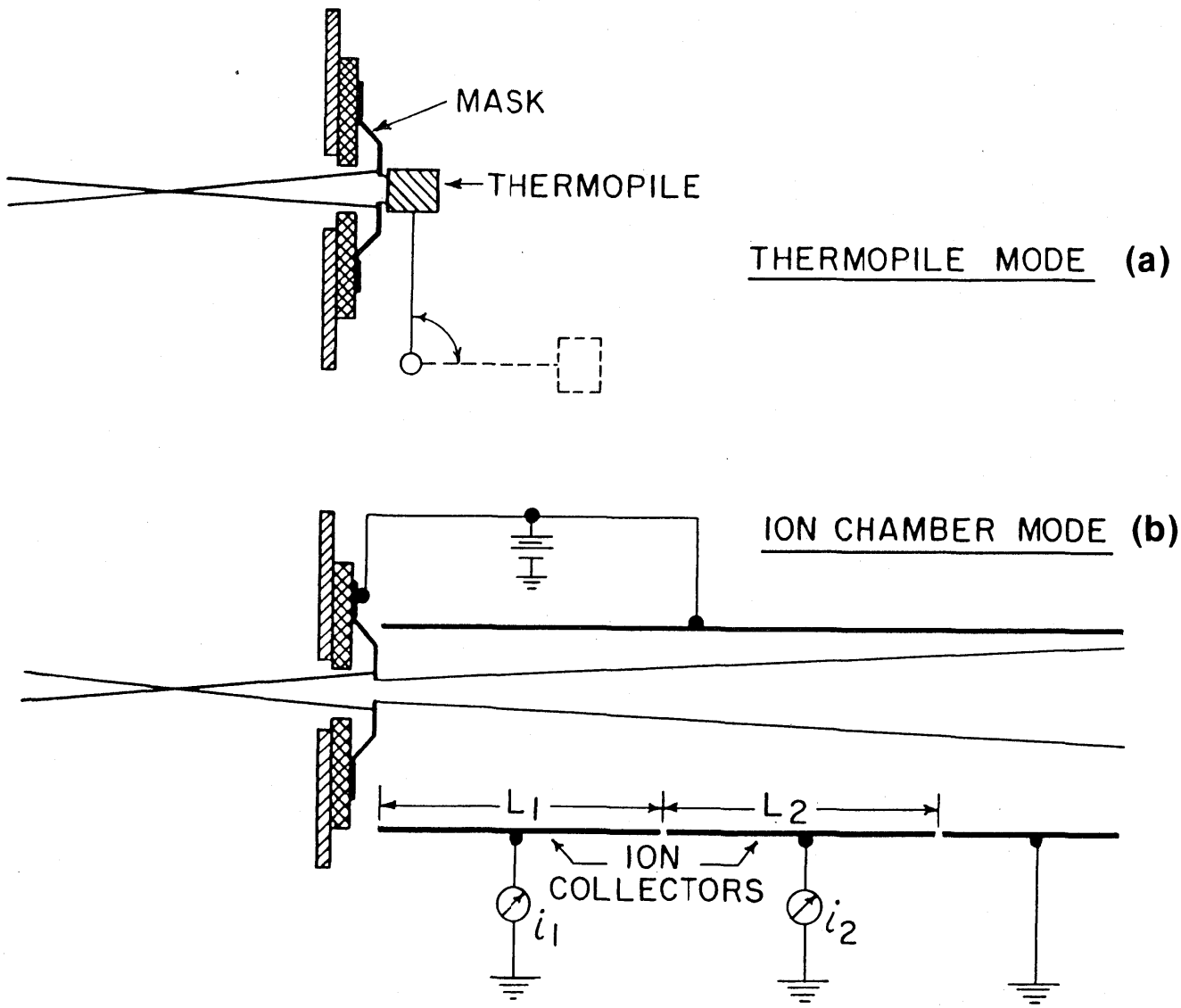
MASK
THERMOPILE
THERMOPILE MODE (a)
ION CHAMBER MODE (b)
L1
L2
ION
COLLECTORS
i1
i2

Figure 5

IV CALIBRATION TECHNIQUES

Although the exact calibration procedures differ in various portions of the spectral region covered, in all cases the absolute reference standard is the rare gas ionization chamber (2,3). At wavelengths at which the photon energy is sufficient to ionize a rare gas, calibration of a photodiode can be accomplished directly; otherwise a windowless thermopile is used to transfer the calibration in wavelength. The mathematical treatment of the absolute calibrations follows.

a. Calibration Principles

1. Ionization Chamber (long wavelengths)

The use of the rare gas ionization chamber in the 50-92nm region is fairly straightforward, since the light source and grating used in this region preclude the existence of second or higher orders from the grating, and the photon energies are insufficient to ionize the appropriate rare gas more than singly and the electrons resulting from ionization events have insufficient energy to cause secondary ionization of the gas. The so-called double ionization chamber is used exclusively in this region, obviating the need for pressure and temperature measurements, or knowledge of the cross section of the gas.

The theory is treated in Ref.(2). The fundamental equation from which the radiant flux may be calculated is:

$$I = \frac{i_1^2}{e\,(i_1 - i_2)} \tag{1}$$

			example
where	i_1	= ion current (plate 1)	1×10^{-10} amp (coul/sec)
	i_2	= ion current (plate 2)	1×10^{-11} amp
	e	= the electronic charge	1.6×10^{-19} coulomb
	I	= radiant flux entering chamber	6.944×10^{8} photons/sec

The numbers shown in parentheses are examples of a "typical" hypothetical case.

1a. Direct Calibration of Photodiodes

If a windowless photodiode is being calibrated directly by use of the ionization chamber, the relationship

$$\varepsilon = \frac{i_D}{e\,I} \tag{2}$$

where i_D = the emissive photocurrent from the photodiode

e = the electronic charge

I = the radiant flux incident on the photocathode

ε = the quantum efficiency (electrons/photon) of the photodiode

may be used to determine the quantum efficiency. Combining equations (1) and (2) gives:

$$\varepsilon = \frac{i_D\,(i_1 - i_2)}{i_1^2} \tag{3}$$

(If the currents from both the ionization chamber plates and the photodiode are measured with the same picoammeter, absolute calibration of the picoammeter is not required.)

1b. Calibration of Thermopile

There is no need to obtain an absolute thermopile calibration if the response of the thermopile to incident radiant flux can be determined relative to a stable reference. Such a reference, a mercury battery, is used to do this, enabling easy relative calibration of the ac thermopile system with the dc ionization chamber.

The general relationship describing the calibration of the thermopile is:

$$I = \frac{i_1^2}{e\,(i_1 - i_2)} = \frac{F\,R\,\ell\,\lambda}{k} \qquad \text{so} \qquad F = \frac{k\,i_1^2}{R\,\ell\,\lambda\,e\,(i_1 - i_2)} \tag{4}$$

where k = monochromator gas absorption correction

ℓ = thermopile photoelectric correction

I = radiant flux incident on thermopile or ion chamber (photons/sec)

F = thermopile calibration factor

λ = wavelength (nm)

R = ratio of thermopile signal to test signal

The subsequent calibration of a photodiode using the thermopile is given by:

$$I' = \frac{i_D}{e\varepsilon} = F\,R'\,\ell\,\lambda \qquad \text{so} \qquad \varepsilon = \frac{i_D}{e\,F\,R'\,\ell\,\lambda} \tag{5}$$

(Here I' and R' have the same meaning as above, but are different values.)

2. Ionization Chamber (short wavelengths)

The use of the rare gas ionization chamber in this region is complicated by the fact that photon energies are high enough to create both multiple ionization (more than one ion-electron pair per event) and secondary ionization from electrons with sufficient energy to ionize the gas. There is also an unrelated complication which the double ionization chamber helps to deal with: high order impurity in the diffracted light from the gratings used. Ref.(9) describes a method for using the double ionization chamber to determine the fraction of the incident light which is first order. Since the range of photon energies used and the distribution of the continuum of SURF-II are now different than those described in the reference, the technique now must be somewhat different.

In order to proceed, certain assumptions must be made. It is assumed that if there are high order impurities, they are only second order. It is also assumed that there exists a portion of the region in which there is only first order (appropriate choices of filters and machine energies can ensure this and the first assumption).

In regions where the fraction of first order is expected to be less than 1, determination of the incident radiant flux (normalized by use of a monitor) is made with both high and low pressure ion chamber measurements. The current from each of two equal length ion collector plates is measured independently in the high pressure mode (the ratio of currents will be seen to be needed); pressure and temperature data are measured in both modes. Two low pressure measurements are made at about 0.010 and 0.020 torr pressure and the normalization is extrapolated to zero pressure to eliminate any effects of secondary ionization (which cannot occur at zero pressure). The relationship which describes the amount of secondary ionization present during the high pressure measurement is then:

$$c = \frac{I_H}{I_L} \tag{6}$$

where c = secondary ionization coefficient

I_L = radiant flux entering the chamber (zero pressure)

I_H = " " " " " (high pressure)

In either pressure mode the flux is calculated from:

$$I = \frac{i}{e\,(1 - \exp\{-\mu k_g\})} \tag{7}$$

where i = total ion current

e = electronic charge

P = pressure

T = temperature (C)

μ = gas absorption coefficient (per cm)

$$k_g = \frac{273.16}{(T + 273.16)} \cdot \frac{P}{760}$$

To determine the fraction of first order "f" at a given wavelength, the above values of "C" are used with the data from the two ion collector plates (high pressure) in the relationship:

$$f = \frac{m_2 \ (1 - rb)}{r \ (m_1 a - m_2 b) + m_2 - m_1} \tag{8}$$

where a = exponential term at T,P for primary wavelength

b = " " " " for half wavelength

c_1 = secondary ionization correction coefficient at primary wavelength

c_2 = secondary " " " at half wavelength

$m_1 = c_1 \ (1 - a)$

$m_2 = c_2 \ (1 - b)$

$$r = \frac{i_1}{i_2}$$

Only low pressure ionization chamber data are used to determine photodiode quantum efficiencies in the 5-50nm region. The equations describing the contributions to total ion current are:

ion current from 1st order $$i_{①} = \frac{f \ Q_1 \ i}{Q_2 \ K_2 \ (1 - f) + f \ Q_1 \ K_1} \tag{9}$$

" " from 2nd order $$i_{②} = \frac{i - i_{①} \ K_1}{K_2} \tag{10}$$

where f = fraction of total flux which is first order

Q_1 = absorption term for 1st order

Q_2 = " " for 2nd order

e = electronic charge

i = measured ion current

K_1, K_2 = multiple ionization corrections for 1st & 2nd orders

The relationships for the general case in which the fraction of first order (f) is less than 1 are:

Radiant flux at primary wavelength:

$$I_1 = \frac{i_{①}}{e\ Q_1} \tag{11}$$

Radiant flux at half wavelength:

$$I_2 = \frac{i_{②}}{e\ Q_2} \tag{12}$$

The above calculations are used, with a prior measurement of the quantum efficiency at the half wavelength (where f=1) to arrive at the efficiency at the primary wavelength:

QE at primary wavelength $$\varepsilon_{①} = \frac{i_D - \varepsilon_{②}\, e\ I_2}{e\ I_1} \tag{13}$$

where i_D = measured photodiode current

$\varepsilon_{②}$ = photodiode efficiency at second order

b. Measurement Methods

1. 5-50nm Region

Calibrations in this region are done at the SURF-II facility, which is described in detail in Section V(a.). The basic technique is to use the photoionization of a rare gas to calibrate a photodiode which can intercept the incoming light before it passes through a thin foil (preventing the ion chamber gas from flowing into the storage ring) into the ionization chamber. The calibration of the monitor photodiode is transferred to a working standard which is then used to calibrate outgoing photodiodes by intercomparison.

The calibration of the monitor photodiode is in terms of response per unit

flux passing through the ionization chamber foil (as a function of wavelength). (It is, of course, impossible to operate a photodiode in the presence of ionization chamber gas.) The calibration of the monitor photodiode must be transferred to a working standard which is illuminated through the same foil(s) that were used during ionization chamber measurements.

2. 50-122nm Region

In this region calibrations are done using a measurement system (A-251 Physics Bldg.) incorporating a normal incidence monochromator and a duoplasmatron light source. This system is described in detail in Section V(c.). Absolute calibrations of a working standard windowless photodiode are done by direct interchange with a rare gas ionization chamber in the region 50-92nm. Two additional wavelengths, 102.6nm and 121.6nm cannot be done using the ionization chamber directly, so the thermopile technique described in the next Section is applied directly to a working standard at 102.6nm, and the 121.6nm point is gotten from intercomparison with a windowed standard. It is not necessary to correct for any of the sources of spurious ionization chamber data described in a. since the photon energy is always less than twice the ionization potential and there is no possibility of second order contamination in the exit beam (due to the use of a line source and a monochromator grating with very low efficiency at wavelengths below 50nm). After a working standard has been calibrated, it may be used to calibrate outgoing photodiodes by direct intercomparison.

3. 116nm-254nm Region

Calibrations in this region require the use of a thermopile to transfer the calibration from the ionization chamber (which cannot be used at wavelengths longer than 102nm) to windowed photodiodes (which cannot be used at wavelengths shorter than 113nm). Early studies proved that the appropriate thermopile appears to have the same sensitivity (probable error 3%) throughout the spectral region 58-92nm (4,5). Therefore it is proper to calibrate such a thermopile at ionization chamber wavelengths (several should give equal sensitivity), and then use the calibrated thermopile to calibrate a photodiode at longer wavelengths. This basic procedure is described in detail in Section V(b.).

As an additional check on the thermopile-derived results, a low pressure Hg arc filtered lamp is used to determine the quantum efficiency of photodiodes. This lamp was calibrated by the Radiometric Physics Division by techniques traceable to blackbody radiometry, and is used as a single wavelength (253.7nm) irradiance source, with the irradiance specified at 2m distance from the source. Two such calibrated lamps are available.

Outgoing calibrations of photodiodes are accomplished by intercomparison of known and unknown, measuring the ratio of photocurrents in a constant intensity monochromatic beam from the monochromator mentioned in b.

V CALIBRATION SYSTEMS

a. SURF-II Detector Calibration System (5-50nm)

HISTORY

The capability of calibrating transfer standard photodiodes at wavelengths requiring grazing incidence optics was established at NBS in the mid-seventies making use of the SURF-II electron storage ring synchrotron radiation facility. This facility served as an extension to shorter wavelengths of the program which was already in place, in which both windowless and windowed transfer standards were made available to interested users. In both facilities the absolute reference detector was a rare gas ionization chamber.

Initially the SURF-II facility was used at wavelengths from about 20-50 nm(6); eventually the range was extended to 5 nm. The transfer standards which were calibrated and issued were exclusively of the windowless NBS design, but on occasions the SURF-II facility was used to calibrate other special detectors for special needs of users (7,8).

In 1983 the existing facility was dismantled to make way for an incoming experiment, and the construction of a new apparatus was begun. A new, dual toroidal grating monochromator optimized for the 3-60 nm region was designed and constructed, as were the toroidal gratings for it. Also designed was a new experimental system incorporating the experiences of the original SURF-II detector facility. The new system was to provide greater flux levels at the experiment, coverage to shorter wavelengths, more accurate results, and faster throughput of calibrations.

EXPERIMENT

The basic configuration of the experimental system is shown schematically in Fig. 6. A pneumatic gate valve isolates the calibration facility from the storage ring. The central portion of this valve is fitted with a window to allow transmission of visible light in the closed position as an aid in system alignment. A pneumatically actuated shutter intercepts the incoming beam, and manually adjustable vertical and horizontal masks limit the illumination of the monochromator grating as appropriate. Detailed operating instructions are given in Appendix B.

Monochromator

A sine bar drive monochromator with two interchangeable toroidal gratings is used. Dispersion is in the vertical plane, with the center 2 meters from the electron orbit tangent point. The angle of incidence at zero order is 83.5 degrees. The ruled gold gratings may be interchanged manually from outside the vacuum housing. At the shortest wavelengths (3-20 nm) a 1200 line/mm grating is used; a 300 line/mm grating is used at longer wavelengths. The spectral scanning range of the monochromator is from slightly below 0 to 20 nm (1200/mm grating) and ultimate resolution is .02 nm. The image of the electron beam is focused on an axially adjustable exit slit, with interchangeable prealigned slits available. A small pneumatic gate valve isolates the monochromator from the experimental chamber portion of the system.

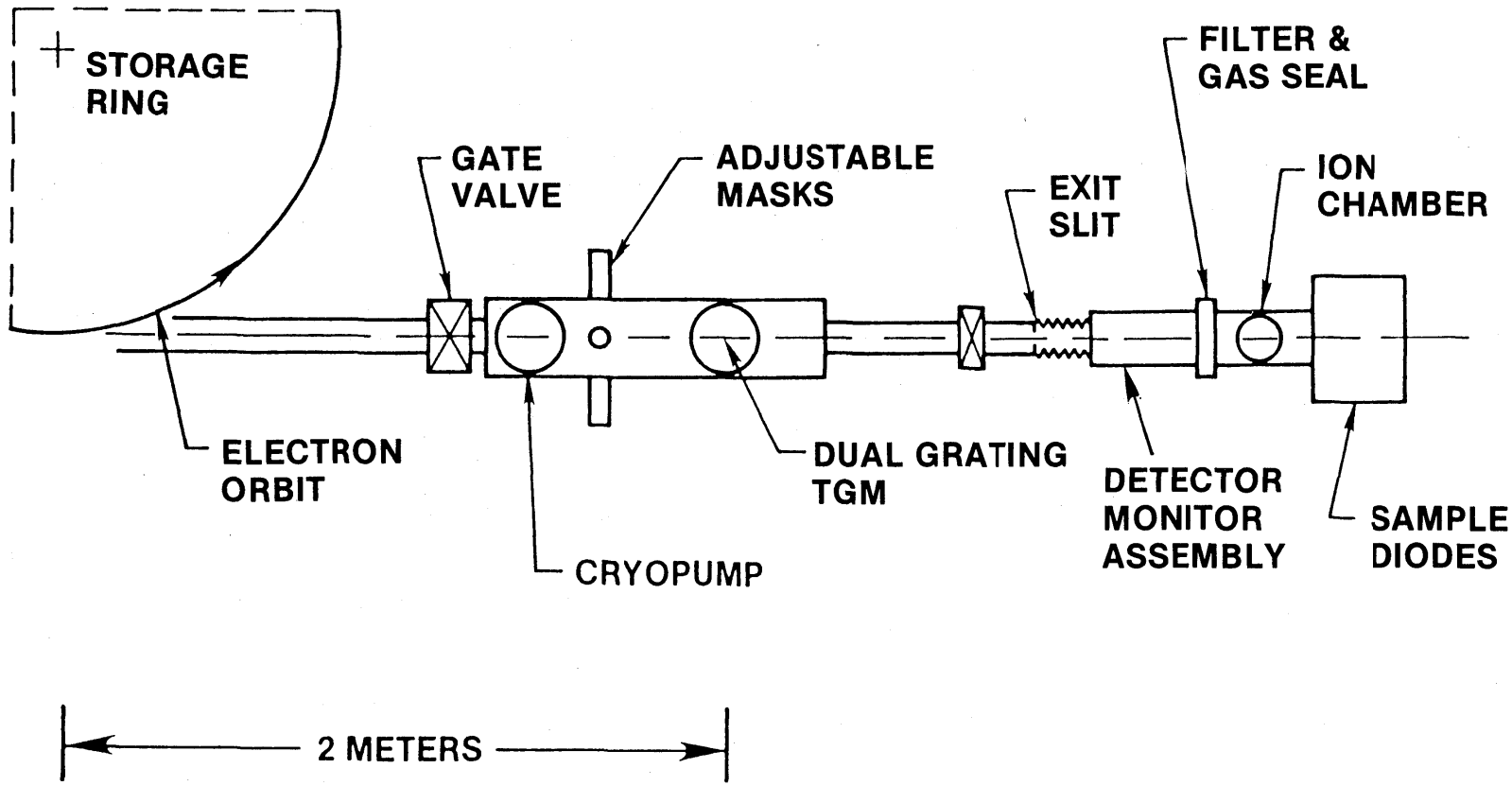

Figure 6. Far UV Diode Calibration Facility at Surf

Foil Chamber

A bellows couples the monochromator assembly to the balance of the system, with a 4mm diameter capillary limiting gas flow toward the monochromator. Radiation emerging from the capillary may be intercepted by a windowless monitor photodiode (of the same type that is ordinarily calibrated) with interchangeable polypropylene or aluminum filters. This assembly (not shown in Fig. 6) provides the intensity level reference for all calibration activities via photocurrent from the photodiode.

Ion Chamber

When the monitor detector and filter are not in the beam, radiation falls into the rare gas ion chamber through one of two manually interchangeable filters (as above) which also serve as gas seals during ion chamber activities, when the gas pressure may be as high as 2 torr. These filters may be interchanged from outside the vacuum system. When non-ion chamber measurements are in progress, the chamber plates remain in place and have, in the absence of interacting rare gas molecules, no effect on the radiation beam.

Intercomparison Module

At the rear of the apparatus is an easily removable flange containing an internal mounting wheel for up to 6 photodiodes, which may be used to make intercomparison measurements. Electrical contact to the photocathode in the beam is made by an external pneumatic actuator, allowing photocurrent from this detector to be measured.

Data Acquisition

A Digital Equipment LSI-11/23 computer and CAMAC interface modules accomplish most data acquisition activities remotely from the SURF-II control room. Stepping motors control both the wavelength drive and diode intercomparison wheel rotation, with encoders monitoring shaft positions. Pneumatic actuators control the shutter, monitor detector and filter positions, and photocathode contact at the intercomparison wheel. Status switches monitor the positions of shutter, monitor detector and filter, gas seal filters, and photocathode actuator. The SURF beam current monitor line is connected to enable integration periods to be normalized regardless of beam intensity level. Incoming data from either emissive photocurrent or ion current are converted to pulses whose frequency is proportional to the current intensity. The pulses are then counted for the period determined by reference to the house beam monitor. Three electrometers are used, with each calibrated daily using a standard current source. Acquisition programs are written in BASIC.

The concept of system operation is that the monitor diode package (diode + filter) monitors the beam intensity and provides a reference for all ion chamber measurements. In other words, the package response is related to the radiation passing through the ion chamber filter. However, when the calibration of the package is transferred to a diode on the rear wheel, the same filter is in the beam, so it is thus possible to have knowledge of the magnitude of radiation reaching the rear detector, and to arrive at an absolute calibration of the detector. (The calibration of the monitor package is, of course, only relative.)

VACUUM SYSTEMS

The vacuum components associated with the SURF-II detector calibration system are shown schematically in Fig. 7. Pumping in the monchromator section of the apparatus is accomplished by two 110 l/sec triode ion pumps, with an open cycle liquid helium cryopump over a gate valve available if needed. A nude ion gauge monitors pressure and a residual gas analyzer head is resident for SURF-II beam line acceptance studies. Beneath the foil chamber is a closed cycle cryopump with an isolation valve and ion gauge. The diode intercomparison/ion chamber region is pumped by another 110 l/sec triode ion pump. Both this region and the foil chamber have ion gauges. A dedicated roughing stand consisting of carbon vane mechanical and liquid nitrogen sorption pumps is connected to the system through a valve, as is the rare gas supply system.

b. Thermopile System (100-320 nm)

1. Introduction

At wavelengths below 102 nm, a rare gas double ionization chamber, which will count individual absorbed photons by the ion-electron pair produced in each absorption, can be used as an absolute photon detector (2,3). Working standard photodiodes in this wavelength range can therefore be calibrated using this ionization chamber (although they will not operate properly in the gas environment of the ionization chamber).

At wavelengths above 102 nm, the photon energy is not sufficient to ionize xenon, the rare gas with the lowest ionization potential (12.13 eV). In this case a method must be found for transferring the absolute calibration of the ionization chamber to the longer wavelength range. Thermal detectors measure the heating of an absorbing element in proportion to the power of the incident radiation and have a response that is generally independent of wavelength. Thus a thermal detector can be calibrated against an ionization chamber in the short wavelength range and then used in turn to calibrate a working standard photodiode in the long wavelength range.

2. Sources of Error

Thermopiles in particular have been studied in the Far UV Physics group as potential standards in the 100-300 nm range (4,5). The assumption that a thermopile will develop a given voltage for a specific level of incident radiation, independent of wavelength, was tested with regard to four possible sources of error:

1) The thermopile may not absorb the same percentage of incident photons independent of wavelength.

2) The thermopile may have energy carried away by photoejected electrons.

3) The thermopile may have a wavelength-dependent time constant when a.c. response to chopped radiation is measured. This effect could cause wavelength-dependent variations in a.c. sensitivity.

4) The thermopile may have a wavelength-dependent spatial sensitivity.

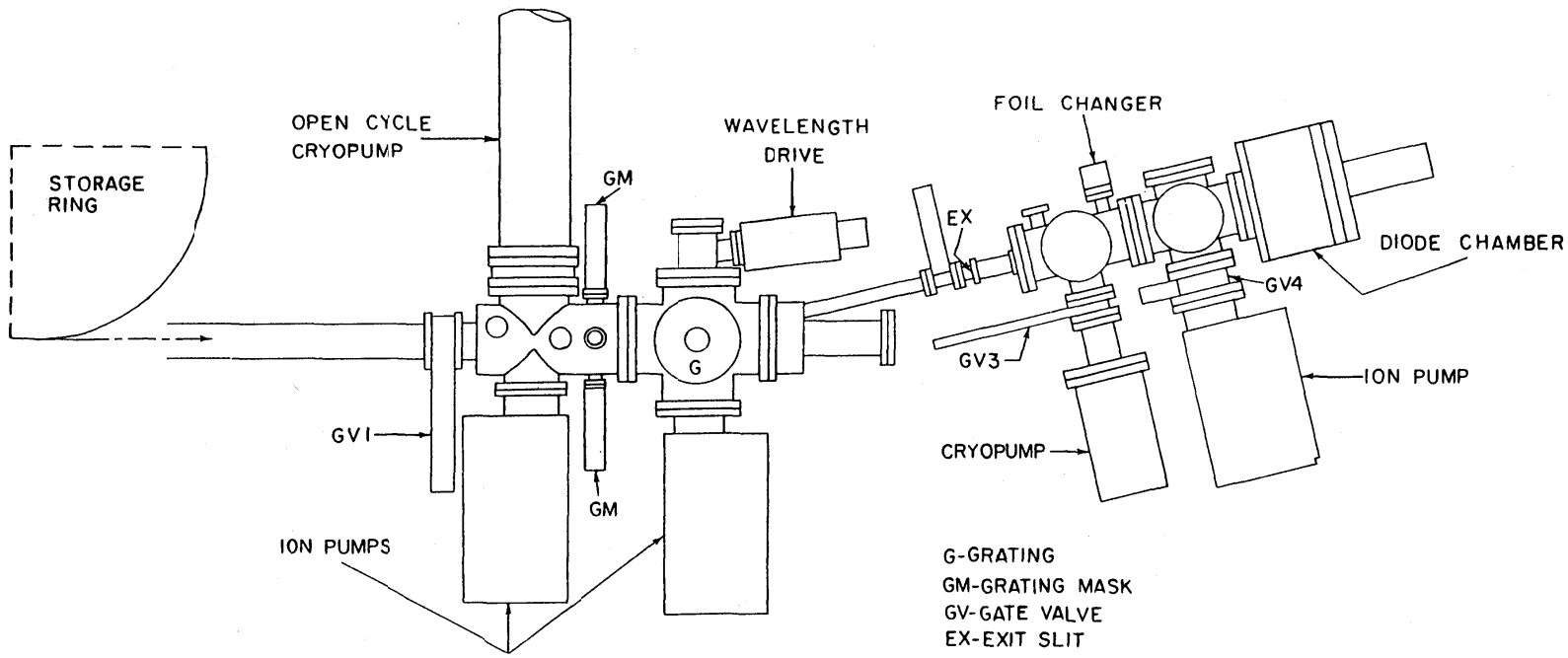

Figure 7. FAR UV Diode Calibration Facility

Possibility (1) was checked for two typical gold blacks used on a Reeder thermopile. The reflective scattering at three wavelengths in the vacuum UV was compared to that in the visible and near infrared and found to be the same within 1% of the incident intensity.

Possibility (2) was tested by measuring the thermopile signal with an electric or magnetic field either switched on to return photoejected electrons to the thermopile or switched off to let them escape. A correction curve (Fig. 8) for the region 58-170 nm was derived to take account of this loss mechanism.

Possibilities (3) and (4) were tested by scanning a thermopile through a narrow beam in the far uv and visible with both dc and ac techniques. Both possibilities were found to have a negligible effect on the results.

The issue of whether such a thermopile indeed had wavelength-independent sensitivity was investigated by calibrating one both in the far uv (with a rare gas ionization chamber as an absolute detector), and in the visible/near infrared (using an NBS carbon filament lamp calibrated for total irradiance). The comparison agreed to about 3%, using the appropriate photoelectric corrections for the far uv data.

3. Calibration Technique

After the demonstration that the thermopile is a reliable detector at longer wavelengths when calibrated by an ion chamber below 100 nm, a UV spectrometer and detector chamber were built to perform UV calibrations on working standard diodes from 100-300 nm (9). The detection system used ac signal detection and processing, since the magnitude of the thermopile emf in the far uv is very weak compared to changes in the background blackbody radiation, which is also detected by a thermal detector in a dc mode.

Vacuum UV light is obtained from a 1-m normal incidence grating monochromator, equipped with a duoplasmatron light source. A 13 Hz chopper, located between the light source and the entrance slit, is used during thermopile measurements to interrupt the light entering the monochromator. Attached to the exit arm of the monochromator is a vacuum chamber which houses the ion chamber and thermopile.

The Reeder thermopile used is of the extended junction variety, employing three such junctions to give a sensitive area 1 mm x 6 mm. It is essentially identical to the one used in the earlier study of thermopiles mentioned above. A rectangular mask with an opening slightly smaller than the area of the thermopile is used. A three point mounting, designed kinematically for accurate relocation, positions the thermopile relative to the surface of the mask, about 0.5 mm from its surface. The thermopile signal is amplified by a 13-Hz amplifier, rectified synchronously with the chopping frequency and recorded using calibrated picoammeters. Net emf readings are taken and referenced to a stable ac test voltage that is applied across the thermopile in the absence of radiation. Immediately following thermopile data acquisition, the thermopile is rotated away from the mask, and the ion chamber or diode being calibrated is exposed to the monochromatized light. The ion chamber or diode currents are then measured. (A gas manifold and set of pneumatic valves are programed to initiate the appropriate flow of gas before

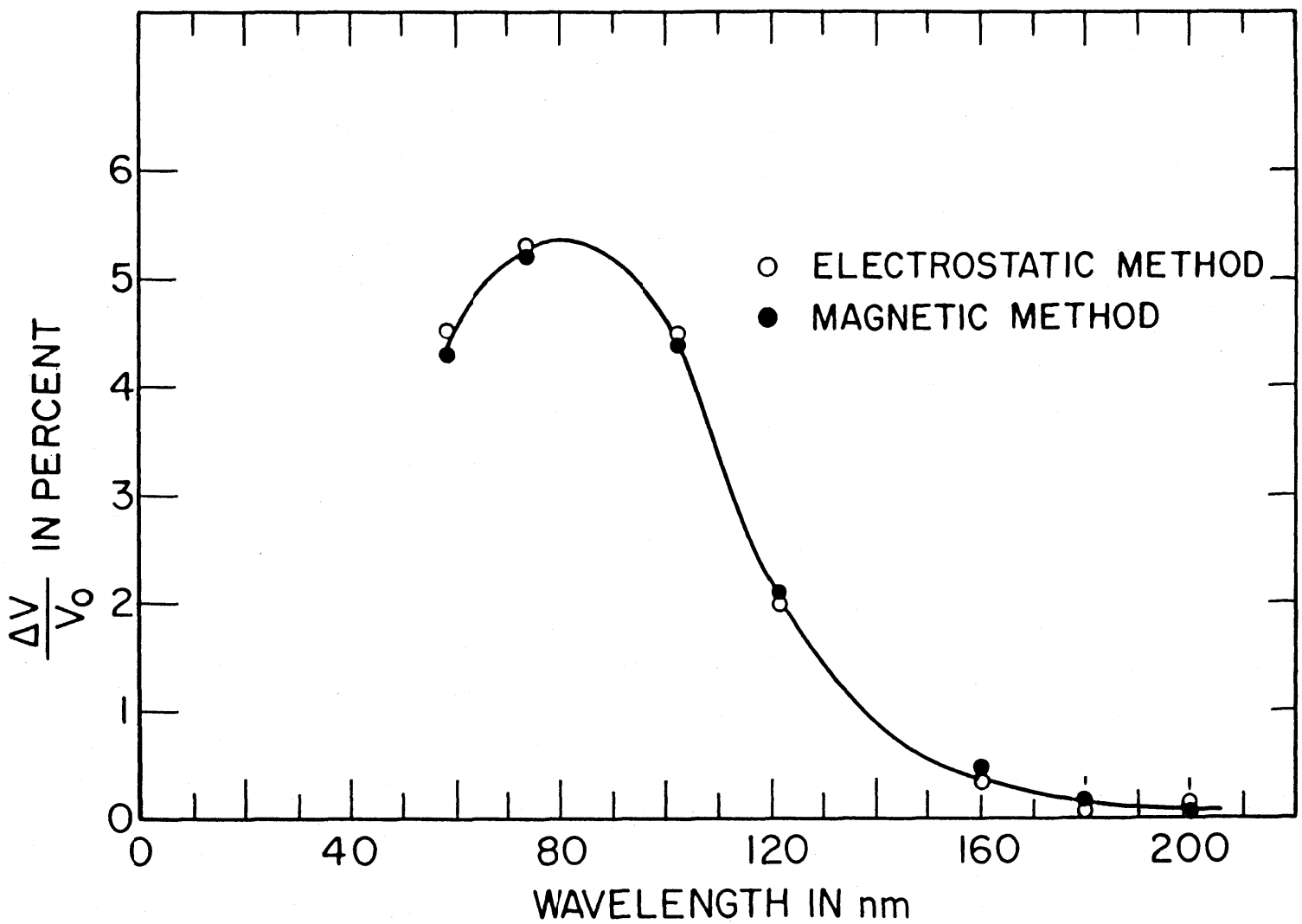

Figure 8. Wavelength Dependence of Thermopile Signal Loss Due to Photoejected Electrons

the ion chamber current measurements are made. After the measurements the gas is pumped away.) The thermopile is then rotated back onto its kinematic mounts behind the mask for another measurement. Alternating measurements are made in this way until enough data have been accumulated to overcome the signal-to-noise problems of the thermopile in the far UV.

An additional, independent calibration of the standard diode is made at 253.7 nm. At this wavelength a stabilized low pressure Hg lamp, calibrated for spectral irradiance at this wavelength by blackbody radiometry techniques, is used as a spectral irradiance standard. The diode quantum efficiency is determined from the known flux falling on the diode and the measured diode current.

4. System Description

Detailed operational instructions for the thermopile system are given in Appendix C. The system as it is presently operated, shown schematically in Fig. 9 and 9a, consists of three distinct parts:

1) Duoplasmatron light source

2) Grating Monochromator

3) Detector chamber

(1) The duoplasmatron light source is a three electrode device, composed of a Pt mesh filament coated with an emitting material, a baffle electrode, and an anode (see Fig. 10). A low pressure arc discharge is constricted by the funnel-shaped baffle and the anode. An axial magnetic field produced by a cylindrical permanent magnet surrounding the outer shell of the light source further constricts the discharge to a narrow plasma beam along the axis. He is used for 58.4 nm, Ne for 73.6 nm, Ar for 92.0 nm, and hydrogen for the 116-320 nm region. The first three gases are used in the ion chamber-thermopile calibration, and hydrogen for the standard diode vs. thermopile calibration. The major arc currents are normally 1.5 A for the rare gases, and 1.1 A for hydrogen.

A chopper blade is located between the light source and the monochromator entrance slit, and is driven in a reciprocating motion through a bellows by a small motor immediately below the light source housing. A flap valve, operated by a stepping motor, is placed after the chopper blade and can be rotated either to seal off the light source from the monochromator, to block the light but allow pumping of the light source through the entrance slit, or to let the light enter the monochromator. The entrance slit is vertical and has a micrometer adjustment of 200 microns per turn.

(2) The grating monochromator is a 1 meter normal incidence monochromator with a spherical grating of 600 lines/mm and a dispersion at the exit slit of 1.67 nm/mm. The dispersion plane is horizontal. The monochromator is pumped by a 6" oil diffusion pump with a freon-refrigerated baffle to reduce oil contamination in the monochromator chamber. A pneumatic gate valve above the freon baffle is electrically connected to a pressure-sensing relay, and closes automatically if the system pressure rises above a preset value. This

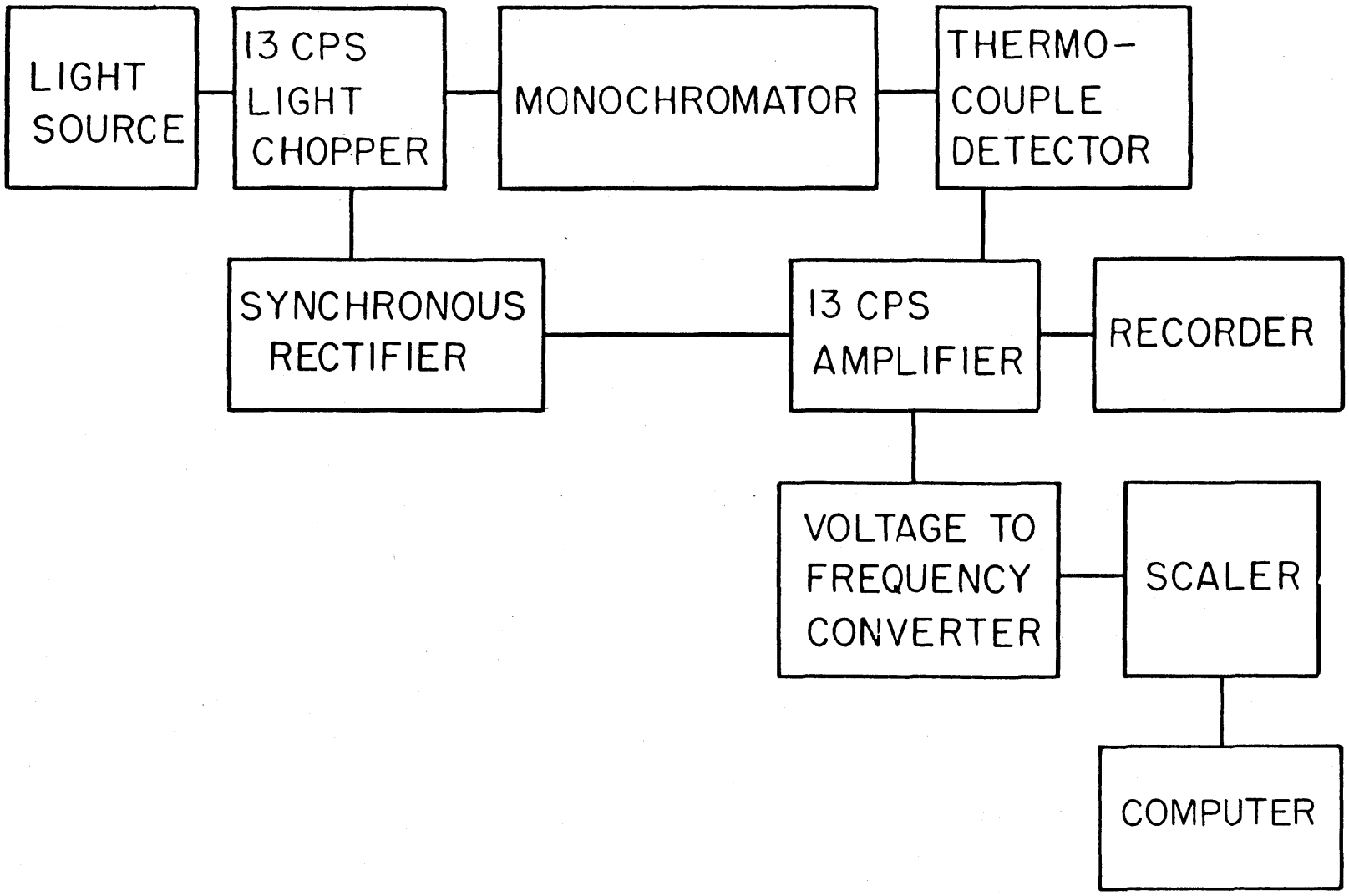
LIGHT SOURCE
13 CPS LIGHT CHOPPER
MONOCHROMATOR
THERMO-COUPLE DETECTOR
SYNCHRONOUS RECTIFIER
13 CPS AMPLIFIER
RECORDER
VOLTAGE TO FREQUENCY CONVERTER
SCALER
COMPUTER

Figure 9

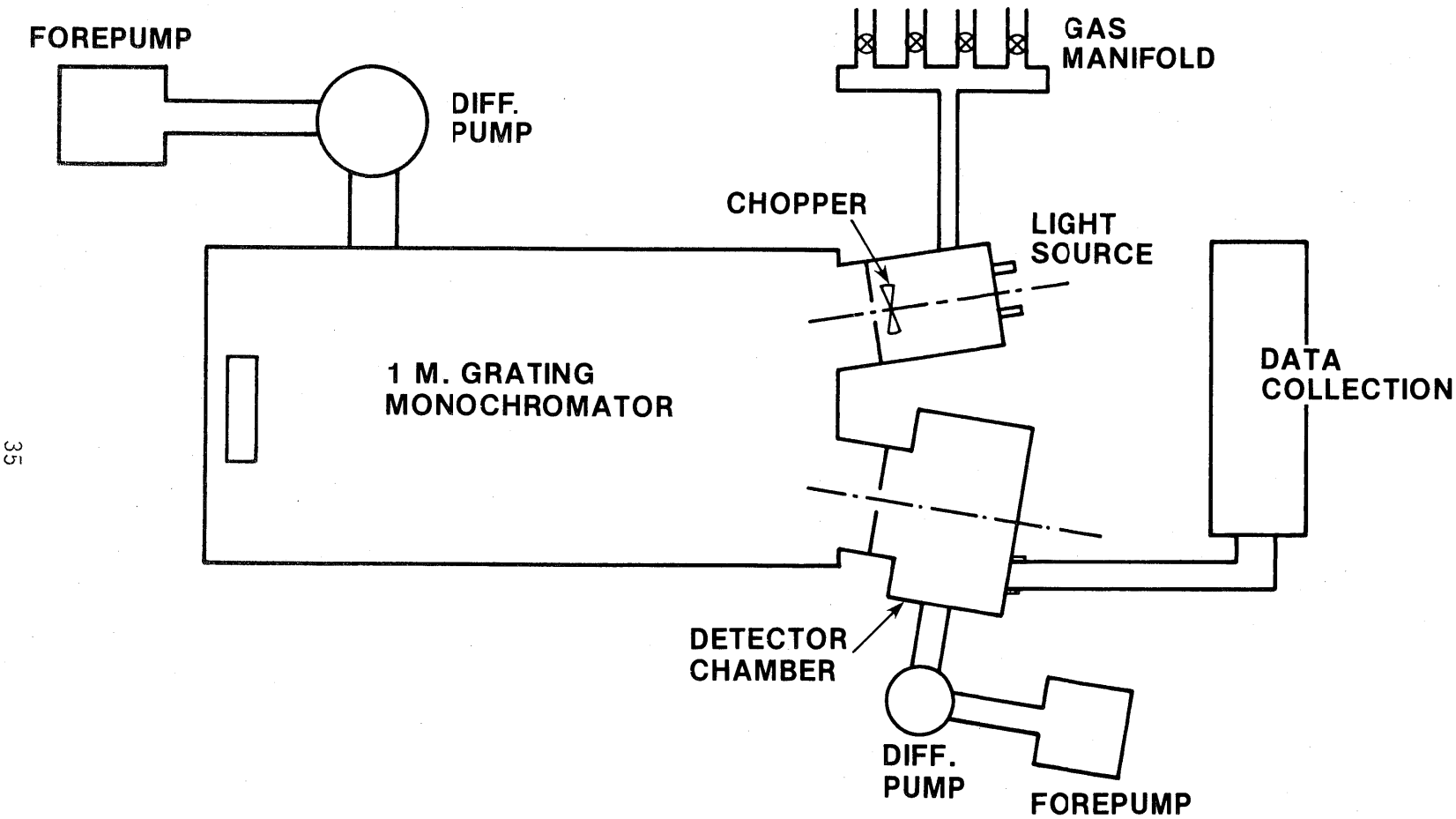
FOREPUMP
DIFF.
PUMP
GAS
MANIFOLD
CHOPPER
LIGHT
SOURCE
1 M. GRATING
MONOCHROMATOR
DATA
COLLECTION
DETECTOR
CHAMBER
DIFF.
PUMP
FOREPUMP

Figure 9a

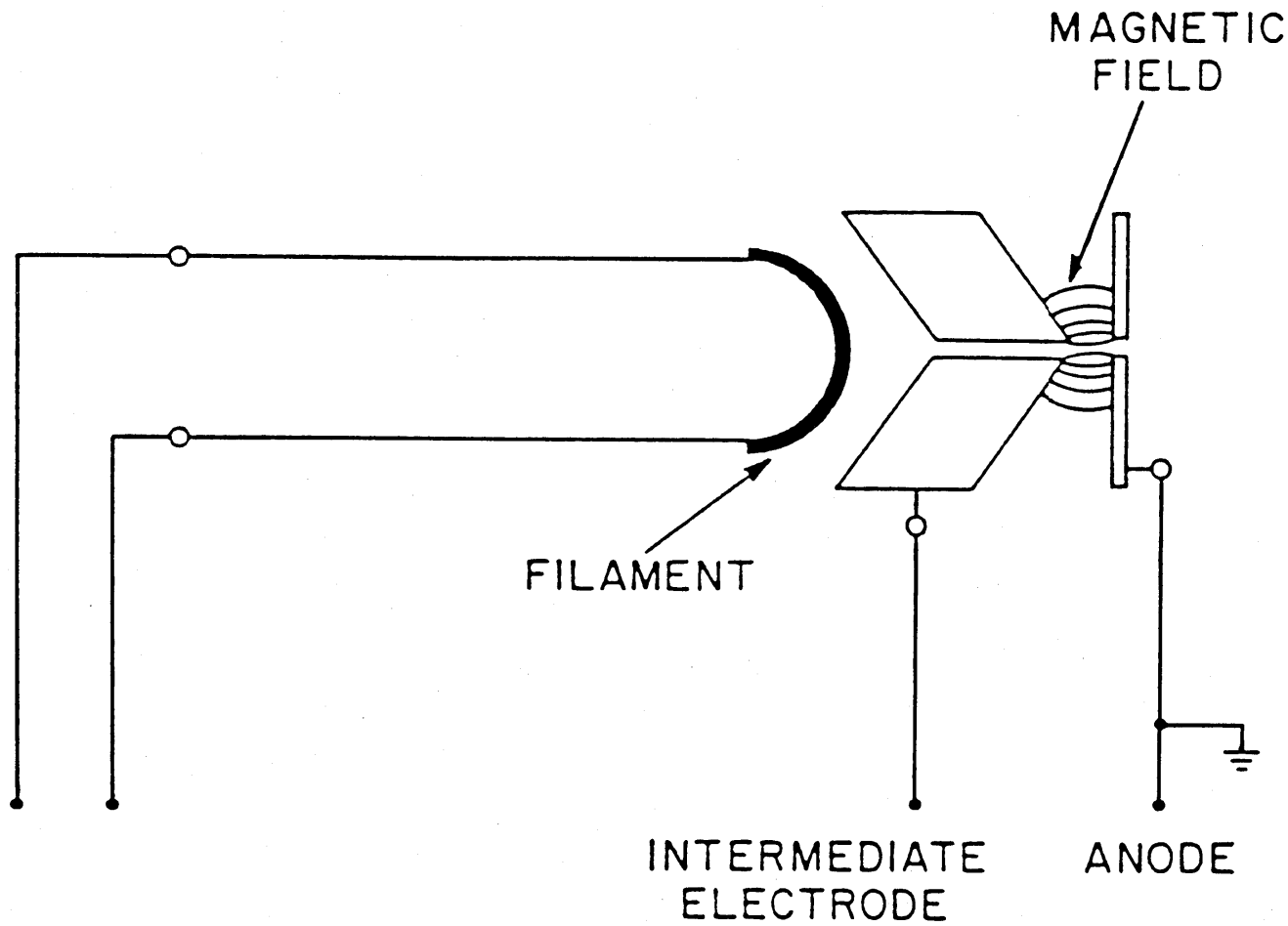

Figure 10. Duoplasmatron Light Source

arrangement protects the system from unforeseen pressure bursts or leaks. A separate roughing valve allows the monochromator to be pumped down from atmospheric pressure without turning off the diffusion pump.

(3) The detector chamber contains the thermopile in its rotatable mount, and has provision for placing the double ionization chamber or the diode to be calibrated in the light beam passing through the exit slit (see Fig. 5). The exit slit is a fixed vertical slit 0.8 mm wide, corresponding to about 1.3nm band width.

The thermopile (Fig. 11) is a series connection of three elements which are composed of bismuth-tellurium and bismuth-antimony alloys. The thermal junctions are extended using gold flakes of 1 mm x 2 mm area. Together they form a sensitive area 1 mm x 6 mm. The thermopile is compensated, designed for a 13 Hz chopping frequency and constructed entirely of non-magnetic materials. The time constant of the thermopile is about 0.04 sec., and when calibrated in the visible had a sensitivity (in vacuum) of 1 microvolt/microwatt and an ENI (equivalent noise input) power of approximately 10^{-9} W. An impedance-matching transformer is used between the thermopile and a preamplifier.

The signal from the preamplifier is fed to a 13 Hz broadly tuned amplifier. The output of this amplifier is rectified synchronously with the chopping frequency by a mechanically coupled rectifier. The signal is then filtered, further amplified, and fed into a V-F converter. A small computer is used to record the data and perform statistical evaluation of the results.

A flap valve is mounted 6 cm in front of the mask, and when closed will allow the detector chamber to be let up to atmospheric pressure without affecting the rest of the system. The rear section of the detector chamber is bolted to the rest of the chamber using a Viton gasket as a vacuum seal. Entrance to the detector chamber is obtained by removing this rear section.

The thermopile is attached to a rotatable mounting so that, under computer control, it may be brought into registration with the kinematic mount, or rotated between the plates of the ion chamber out of the beam.

The ion chamber used is a double ion chamber similar to that described by Samson (2)(see also Section III). The length of each collector plate is 10.2 cm, and the forward end of the first plate is positioned in the plane of the mask. The axis of the light beam is 0.8 cm from the positive plate, which, with the mask, is kept at +22 V with respect to the collector plates. The ion chamber assembly is a self-contained unit with Teflon bars used as a framework to support the various polished stainless steel plates. The assembly is positioned behind the mask reproducibly by a locating screw and machined recess in the floor of the chamber.

The thermopile is calibrated against the ion chamber in the following manner: The thermopile housing is rotated into position against the (grounded) mask. With the source chopper operating but the light source blocked by the flap valve, the signal is recorded by the 13 Hz detection system. Five consecutive measurements of thermopile background are made. The thermopile is then connected to a chopped stable test voltage (normally a 1.35 V. mercury battery) and the thermopile response to this ac test signal is measured. This measurement normalizes the thermopile response from one set of measurements to another.

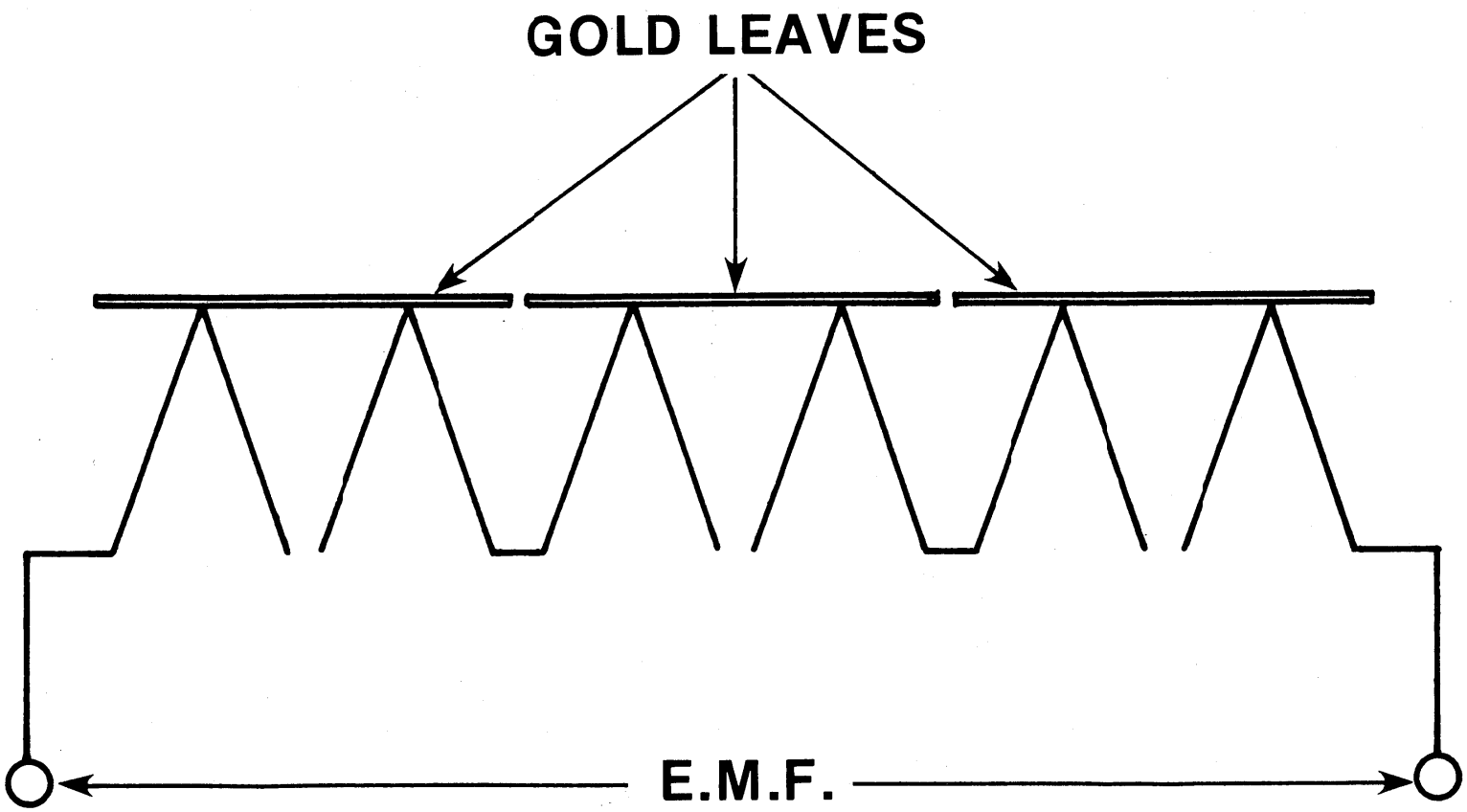

Figure 11

The thermopile is rotated down, clear of the ion chamber plates, and the chopper stopped. Argon is admitted to the ion chamber for 58.4 and 73.6 nm measurements, and xenon for the 92.0 nm measurement. The gas pressure is adjusted to give a current ratio between the first and second plates of about 10:1. This pressure in the detector chamber is about 130 microns for Ar and 50 microns for Xe. When the the ion chamber currents have been measured, the gas flow is shut off by computer-controlled solenoid valves, and the gas is pumped out at the exit slit by the 6" diffusion pump. When the detector chamber pressure reaches about 20 microns, a pneumatic gate valve opens to a 2" diffusion pump directly under the chamber, and the remaining gas is pumped away.

The thermopile is then raised into position by a computer-controlled stepping motor, and the chopper started. The flap valve in front of the light source is programmed through another stepping motor to block the light from the duoplasmatron for thermopile background measurements, and to open for signal measurements. After five background and five signal measurements, the thermopile is lowered again by the stepping motor.

The ion chamber measurement is repeated and the process continues until three ion chamber measurements are sandwiched around two thermopile measurements. The thermopile test signal response is then remeasured.

The following corrections are applied to the data as it is recorded (i.e. in real time):
1) The thermopile signal is corrected for losses through photoemission, amounting to 4.4% at 58.4 nm, 5.3% at 73.6 nm, and 5.1% at 92.0 nm (see Fig. 8). 2) The reduction in flux entering the ion chamber due to absorption by the argon or xenon leaking into the monochromator through the exit slit is corrected for by making a separate measurement of attenuation vs. monochromator pressure over a range of pressures. Thus by monitoring the monochromator pressure the appropriate correction, typically 4%, can be applied. (Note that the ion gauge attenuation calibration must be checked frequently.)

The average flux from two successive ion chamber measurements is compared to the thermopile signal between them to give a thermopile response factor. The response factors from the two thermopile measurements are compared to make sure no drifts have occurred during the entire measurement, which takes about 60 minutes. These measurements are repeated several times at each of the three wavelengths and the results averaged. The response factors of the thermopile are typically within a few percent of each other over a set of measurements. However long-term drifts can reach 25% over several years. (This number does not contribute to the total error budget, since the thermopile is recalibrated each time a photodiode is to be calibrated, and only short-term drift is important.)

When the thermopile response has been calibrated by the ion chamber measurements, the detector chamber is let up to air with the flap valve closed. The ion chamber is removed through the rear section, and the diode to be calibrated is mounted on a fixture and positioned in the path of the flux through the exit slit. The chamber is then roughed down and the gate valve above the 2" diffusion pump opened to pump the chamber to high vacuum.

The MgF_2-windowed diodes are calibrated against the thermopile at 23 wavelengths from 116.4 to 253.7 nm. The light source gas is hydrogen over the entire wavelength range. From 116.4 to 160.8 nm, the hydrogen line spectrum is used. Above 160.8 nm the molecular hydrogen continuum light is used. Also, a quartz filter is placed in front of the light source when wavelengths longer than 160.8 nm are used to prevent second order radiation from reaching the thermopile and diode.

For the 116.4 to 160.8 nm range, the light source slit opening is set to 50 microns. After the quartz filter is inserted, the slit must be opened to about 200 microns for adequate light intensity.

At each wavelength the thermopile test signal response is measured first, just as in the ion chamber measurement. The thermopile is rotated down and the diode background current and signal current are measured. The light source intensity is adjusted to keep the diode current below 3×10^{-9} A. The thermopile is then rotated back into position and the background and signal measurements are made as before. In this manner three diode and two thermopile measurements are made, and then the thermopile test signal response is remeasured. From each pair of diode measurements around a thermopile measurement and the thermopile response factor determined from the ion chamber measurements, the diode quantum efficiency is determined.

If the two results are in satisfactory agreement, the spectrometer wavelength drive is scanned manually to the next wavelength. Each set of measurements takes about 40 minutes.

c. Photodiode Intercomparison System (50-254nm)

History

In 1968 funds became available for the purchase of the necessary instrumentation to build a system whose primary purpose would be to calibrate outgoing transfer standard detectors by intercomparison with NBS working standards which had been calibrated by the already existing thermopile system (4). Initially this system lacked any control or data reduction capabilities; this was added in the early 1970s and upgraded in an evolutionary fashion to the present configuration, in which nearly all data acquisition and reduction functions are automated. With this evolution came the additional capability of performing absolute calibrations of windowless photodiodes in the 50-92nm spectral region, which greatly expanded the coverage possible and considerably reduced the time required. In the present form, intercomparison-type calibrations are conducted from 50nm to 254nm, and absolute calibrations from 50nm to 92nm.

Experiment

The basic configuration of the experimental system is very much the same as that of the thermopile system, (see Fig. 9a). A duoplasmatron light source illuminates the entrance slit of a normal-incidence vacuum monochromator, and the experimental chamber is attached to the exit slit flange. Various experiments are permanently attached to modular flanges, which can be exchanged on the otherwise empty chamber. Data acquisition and reduction is under the control of a programmable calculator. Detailed operational instructions and descriptions are included in Appendix D.

Monochromator

A one meter normal-incidence McPherson model 225 monochromator is used with its own vacuum pumping system. A 15cfm mechanical forepump is used for both rough pumping and for backing a 7" diffusion pump, which uses DC705 silicone pumping fluid. A refrigerated chevron trap and pneumatic gate valve are attached to the top of the pump. A zeolite molecular sieve trap is used in the foreline to minimize the migration of forepump oil vapors into the high vacuum system. Both exit and entrance slits are laterally adjustable, and both the exit and entrance flanges may be isolated from the monochromator vacuum by manual flap valves. The diffraction grating is a 600/mm replica, with nominal blaze at 150nm. The dispersion at the exit slit is thus 1.67nm/mm. A modified sine-bar drive provides wavelength scanning by both rotation and translation of the grating.

Light Source

A duoplasmatron source, fabricated in-house, is used for all spectral regions in this system. A manifold allows the introduction of any of several gases as appropriate for the emission desired, and a roughing line is attached to the foreline of the experimental system. This type of source uses a hot filament, three electrodes and a pinching magnetic field to create a rather dense plasma which is on the optic axis of the monochromator. Because it is only about 1.5mm in diameter and is several cm from the entrance slit, only the central portion of the grating is illuminated by the plasma. Gases routinely used at wavelengths short of 100nm are He, Ar, Kr and Ne. For wavelengths longer than 100nm hydrogen is used. Cooling of the source is by forced air both in the area where the plasma strikes the anode and around the exterior of the filament end. Separate unregulated power supplies are used for the filament (ac) and the minor and major arcs (dc). A cross section of the duoplasmatron is shown in Fig. 10, a schematic of the power supply is Fig. 12.

Experimental Chamber

A cylindrical stainless steel chamber with provision for rear mounting of modular flanges is attached to the exit slit flange. This chamber is provided with an independent vacuum system, consisting of a 2" pneumatic gate valve over a refrigerated chevron trap over a 2" diffusion pump using polyphenyl ether fluid. The 2" pump is backed with a trapped mechanical forepump, which is also used for roughing. The usual valves isolate and protect. Experiments are attached to the chamber mounted on a flange, which attaches to the rear of the chamber.

Experimental Modules

Three such modules are routinely used: an intercomparison module, a mapping module and an ion chamber module.

The intercomparison module contains a rotating wheel, on which two photodiodes may be mounted for intercomparison measurements. In general, the photocathodes of the two photodiodes are shorted to ground, the exception being that when either is in the beam, its photocathode is connected by means of a gold wiper

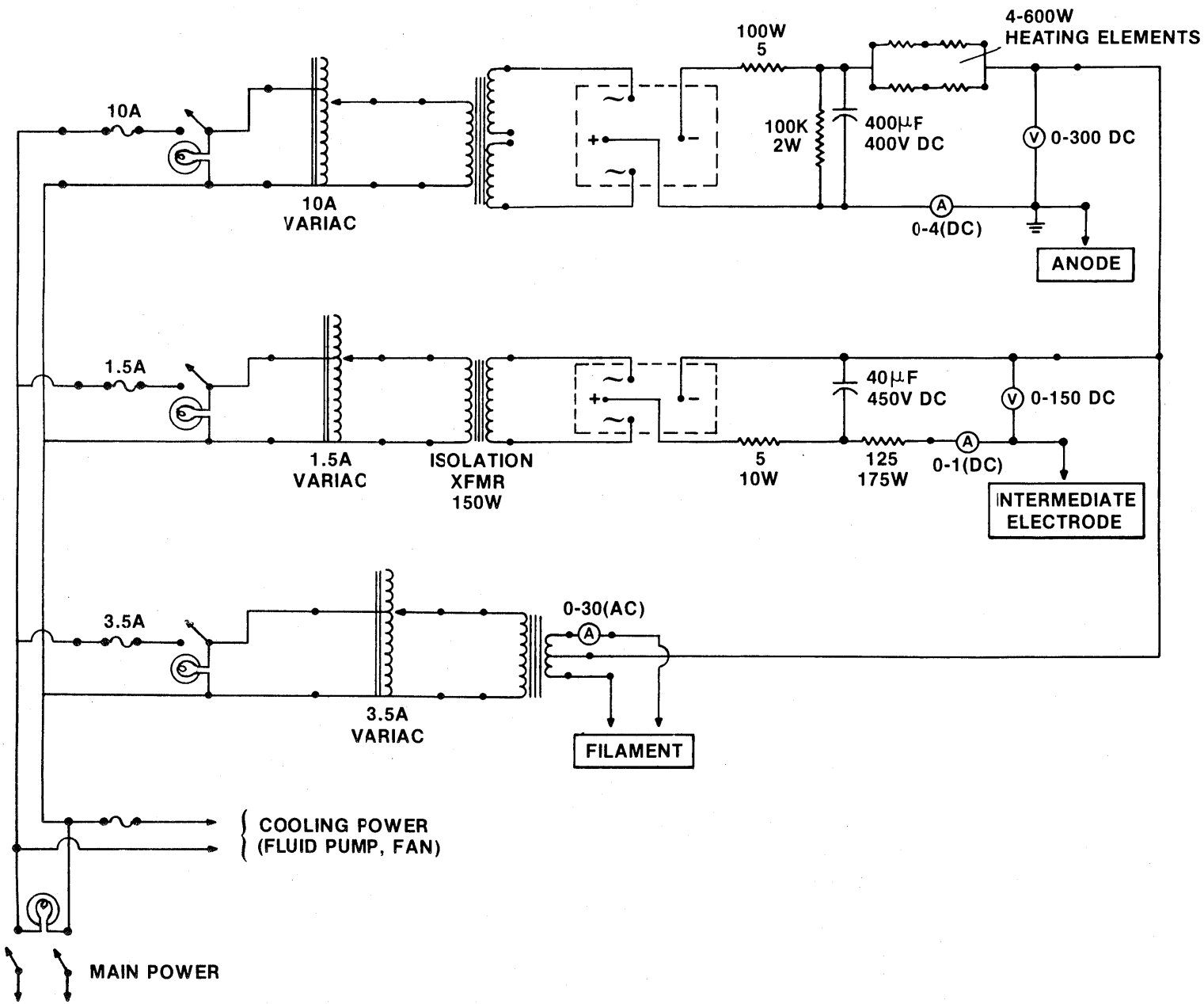

Figure 12. Duoplasmatron Power Supply

to a vacuum feedthrough. The anodes are tied together and at all times connected to another feedthrough. Provision is made for rotational relocation of either photodiode about its center, and quartz or Vycor filters may be manually inserted in the beam to aid in eliminating overlapping orders from the grating.

The mapping module flange has orthogonal linear motions on the atmospheric side driving a shaft going through the flange with a bellows seal. The shaft is supported inside the vacuum by a gimbal mount, so that displacement of the outside end of the shaft will result in a proportional displacement of the end inside the vacuum. Thus an object may be scanned in space inside the vacuum system in a controlled manner. The normal applications of this module would be either to map the response of a photocathode (with the beam stopped by a fixed small aperture) or to map the intensity distribution of the beam (with the small aperture attached to a photodiode). The external motions can be driven by stepping motors, and the exact position may be monitored by linear displacement transducers. An example of the normalized result of such a scan is seen in Fig. 13.

The ion chamber module is used to directly calibrate a windowless photodiode by means of a rare gas double ion chamber(2,3). Attached to a rotary motion on the vacuum side of the flange are an ion chamber with two 10cm plates with a guard plate and a photodiode. Either one or the other may be placed in the beam by a stepping motor. As this module is placed into the experimental chamber a small Teflon flange near the exit slit provides a seal so that the only leakage path for gas from the chamber into the monochromator is through a small aperture in the exit beam. High purity Ar and Xe are individually brought into the chamber on demand with needle valves limiting the flow so as to balance the influx and leakage into the monochromator and give the desired gas pressure. The gate valve beneath the chamber may be program controlled to open and remove the residual rare gas before photodiode readings are taken and to close so that fresh gas may be admitted before making ion current readings.

Data Acquisition

Almost all system operations are controlled by a programmable calculator with an external CPU and interfaces to drive stepping motors, actuate solid state relays and hence valves, etc., switch between sources of very low current or analog voltages and actuate and read a counter-timer. Analog voltages are converted to proportional pulses, which are counted for fixed periods by the counter-timer. The control programs also contain the data reduction routines, so that the final results of an experiment are available at the conclusion of the data acquisition sequences. Storage of programs or data is on magnetic cards, each card holding .5K bytes. Printout is on paper tape.

98.7	98.7	98.8	98.6	98.4	98.6	99.0	99.4	99.6	100
98.6	98.5	98.3	98.2	98.5	98.7	98.9	99.4	99.8	99.9
98.4	98.5	98.0	98.0	98.5	98.8	98.9	99.3	99.3	99.7
98.6	98.2	97.9	98.0	98.7	99.2	99.2	99.7	99.8	99.9
98.2	98.2	98.3	98.5	98.9	99.2	99.4	99.7	99.7	99.6
98.0	98.2	98.5	98.6	98.6	99.1	99.4	99.5	99.6	99.6
98.0	98.5	98.8	98.9	98.9	99.0	99.2	99.3	99.6	99.5
98.2	98.4	98.7	98.8	98.8	98.7	99.1	99.3	99.5	99.6
98.2	98.4	98.4	98.4	98.7	98.9	99.1	99.2	99.2	99.6
98.4	98.2	98.2	98.5	99.0	99.4	99.4	99.0	99.1	99.6

$\lambda = 121.6$ nm

SPATIAL UNIFORMITY-CENTER OF EVSD PHOTOCATHODE

Figure 13

VI TREATMENT OF ERRORS

Uncertainties associated with the measurement of quantum efficiencies are reported in each Report of Test as "probable errors", meaning that there is a probability of 0.5 that the true quantum efficiency values lie within the stated error range about the values quoted. The values represent the expected accuracy of the sample photodiode when properly used in a customer's system, without regard for any systematic errors present in that system. Each Report of Test includes a Discussion section, in which the user of the sample photodiode is cautioned that the temporal stability of the efficiency cannot be positively predicted, particularly in the case of the windowless photodiodes with their air-exposed photocathodes.

The probable error values are determined by summation, in quadrature, of estimates of the effect of all sources of systematic errors in the NBS measurements, including the precision of repeated measurements, on the determination of the quantum efficiency of a photodiode. The analysis of the calibration of windowed photodiodes in the thermopile system follows.

THERMOPILE-BASED CALIBRATIONS

Error Source	Estimated Uncertainty(%)
Calibration of thermopile (58-92nm):	
ion current (electrometer manufacturer)	2
gas absorption (estimated)	1
photoelectric correction (estimated)	0-1
measurement precision (observed)	3
radiation impurity (estimated)	0-0.5
Photodiode calibration by thermopile (116-253nm):	
photocurrent (electrometer manufacturer)	2
photoelectric correction (estimated)	0-1
cathode uniformity (observed)	2
thermopile wavelength sensitivity variation (estimated)	3
measurement precision (observed)	2-8
radiation impurity (estimated)	0-1
Probable Error(%)	6-10

The comparison calibration of a thermopile involving a standard lamp and the ionization chamber cited on p.31 was a test of the wavelength independence of the sensitivity of a thermopile (far ultraviolet vs near infrared) and is not routinely done, but it did build confidence in the ability to produce meaningful data from an ionization chamber calibration of a thermopile. The agreement found is not, however, directly relevant to these analyses. Cross-checks of the quantum efficiency of photodiodes using a calibrated mercury lamp (253.7nm) cited on p.33 serve as a test of the accuracy of the thermopile calibration results at the single wavelength where such a comparison is now possible.

In the above sources of possible error, those associated with current measurements are due primarily to the probable error of the current source used to calibrate the measuring picoammeters. The gas absorption uncertainty involves the repeatability of ion gauge measurements (the calibration of such gauges has been observed to drift in time). The photoelectric correction is an empirically determined quantity (see p.31) which may vary from the samples originally measured. (Since this correction is zero at many wavelengths above the range of the ion chamber, the uncertainty of the correction is a function of wavelength.)

The cathode uniformity is measured on each photodiode and units with more than 5% variation in pixel spatial response over the central 1 cm diameter area are rejected. (Should a photodiode be found to have a discontinuous uniformity function, even within the 5% acceptance criterion, it would not be issued as a transfer standard.) The portion of the measured area actually used in the NBS measurements is the central 4x5mm section, and the intensity distribution in the incident beam is relatively uniform over much of this area. The ultimate user of a photodiode will also illuminate the central area of the photocathode, but with a generally different intensity distribution and, perhaps, a somewhat larger area illuminated. This would result in an error in the transfer of the NBS calibration, but not approaching the peak variation of 5% allowed in device acceptance. Our estimate is a probable error of 2% from this source.

The variation of thermopile sensitivity (with wavelength) is an estimate based on the variation seen within the 58-92nm range and the cross-calibration of detectors using a calibrated Hg source (Section IV). The measurement precision (repeatability) is a function of wavelength in the above case in the upper portion of the windowed photodiode calibration range because of deteriorating signal-to-noise in the thermopile measurements as the efficiency of the optics declines and the intensity of the beam is thus reduced.

The above example covers the case of uncertainties in the calibration of windowed photodiodes. The probable error currently being quoted for windowless photodiode calibrations is 8% in the 50-122nm region and 10-15% in the 5-50nm region. These errors are determined from the following analyses.

WINDOWLESS PHOTODIODE CALIBRATIONS AT SURF (5-50nm)

Error Source	Estimated Uncertainty(%)
gas cross sections (data reference)	3-4
multiple yield (data reference)	0-1
gas temperature (estimated)	0-0.5
gas pressure (transducer manufacturer)	0-3
photocurrent precision (observed)	2-6
ion current precision (observed)	5-7
radiation impurity (estimated)	8-12
Probable Error(%)	10-15

(Note that the individual errors are wavelength dependent, and therefore the larger quadrature sum is less than the sum of the largest uncertainties.)

In the above analysis, the cross section and multiple yield data are taken from published sources with interpolation between published wavelengths where necessary. Since, in this region, the reduction of ionization chamber data entails the use of gas constants, including the pressure and temperature, the contribution to the error budget from these must be included. Errors arising from current measurements are primarily from the variance within sets of three consecutive conversions of currents permitted in the acquisition program. The radiation impurity contribution can only be estimated from observation of system performance, and could include improper assessment of overlapping orders from the diffraction gratings, stray light from masks, baffles, walls, etc., the "zero order tail" from the gratings, and imperfections in the filters used to minimize this source of error. This error would be wavelength dependent, of course.

WINDOWLESS PHOTODIODE CALIBRATIONS (non-SURF, 50-122nm)

Error Source	Estimated Uncertainty(%)
photodiode current (estimated)	2
ion current (estimated)	2
gas absorption correction (estimated)	0-1
measurement precision (observed)	3
stability of quantum efficiency (estimated)	7
radiation impurity (estimated)	0-1
Probable Error(%)	8

All current measurements in this region are conducted with a single picoammeter, and since it is the ratio of photodiode to ion chamber currents that is used to calculate quantum efficiency, an absolute calibration of this picoammeter is not necessary. The estimated uncertainties associated with current measurements would be largely due to ionization of residual gases and other spurious effects. The gas absorption correction is necessary only during ion chamber measurements to account for the radiant flux absorbed in the monochromator (typically 10% or less) so the likely error from this source is minimal. The stability of the quantum efficiency of working standard photodiodes is felt to be a possible source of error only in the longer wavelength region (50-122nm), since in the 5-50nm region (at SURF-II) the photodiodes are calibrated and stored in ultrahigh vacuum, whereas in the other facility calibrations are in an oil-pumped system, and storage is in air.

VII SAFETY PRECAUTIONS

The systems used in the far uv detector calibration program present no unique safety hazards beyond those encountered in a typical laboratory environment. At the SURF-II facility liquid nitrogen is frequently used in vacuum pumping applications, and in both the thermopile lab and the photodiode intercomparison lab hydrogen gas (at very low pressure) is used to supply the light source over part of the wavelength ranges. Standard prudent care in the handling of these substances is important.

VIII CUSTOMER INTERACTION

Interaction with potential users of NBS far uv detector services generally leads to the supplying (by NBS) of calibrated transfer standard photodiodes or in the subsequent recalibration of them. In response to inquiries regarding such standards, descriptions of the photodiodes (see III), operating instructions, sketches, price schedules, etc. are sent as appropriate, and technical questions are answered by telephone or letter.

Purchase orders are accepted for new photodiodes or for recalibration of previously supplied ones, and work scheduled in a timely fashion. Windowless photodiodes are fabricated in-house in batches, and windowed photodiodes are purchased from Science Applications International Corporation, Electronic Vision Systems Division using a reimbursable cost center. Calibration activities are scheduled to meet customer requirements and the results are given in Reports of Test (see Appendix A). While Reports of Test for new photodiodes conform to an established format, a Report dealing with a recalibration which revealed an abnormality in the device efficiency would include a portion of the Discussion section treating this. Should the photodiode under study be no longer suitable for use as a transfer standard, it would be returned uncalibrated with the recommendation that it be replaced.

IX ACKNOWLEDGEMENT

The assistance of Drs. Robert P. Madden, Edward B. Saloman, David L. Ederer, and Mr. Lanny Hughey is gratefully acknowledged. Dr. Madden has been Group Leader of the Far Ultraviolet Physics Section throughout the period during which the far ultraviolet detector calibrations program has been active. Dr. Saloman was responsible for setting up the original SURF detector calibration system, with the technical assistance of Mr. Hughey. Dr. Ederer, with Dr. Saloman, conducted the analysis which led to the capability of interpreting data from short wavelengths.

REFERENCES

1. L.R. Canfield, R.G. Johnston & R.P. Madden, "Preliminary Report on Photoelectric Detector Transfer Standards for the Vacuum Ultraviolet", NBS Report #9897.

2. J.A.R. Samson, "Absolute Intensity Measurements in the Vacuum Ultraviolet", J. Opt. Soc. Am. 54, 6 (1964).

3. J.A.R. Samson & G.N. Haddad, "Absolute Photon-flux Measurements in the Vacuum Ultraviolet", J. Opt. Soc. Am. 64, 47 (1974).

4. R.G. Johnston & R.P. Madden,"On the Use of Thermopiles for Absolute Radiometry in the Far Ultraviolet", Appl. Opt. 4, 1574 (1965).

5. L.R. Canfield, R.G. Johnston, K. Codling, & R.P. Madden, "Comparison of an Ionization Chamber and a Thermopile as Absolute Detectors in the Extreme Ultraviolet", Appl. Opt. 6, 1886 (1967).

6. E. B Saloman & D. L. Ederer, "Absolute Radiometric Calibration of Detectors Between 200-600Å", Appl. Opt. 14, 1029 (1975).

7. R.H. Day, P. Lee, E.B. Saloman, & D.J. Nagel, "Photoelectric Quantum Efficiency and Filter Window Absorption Coefficients from 20 eV to 10 KeV", J. Appl. Phys. 52, 6965 (1981).

8. E.B. Saloman, J.S. Pearlman, & B.L. Henke, "Evaluation of High Efficiency CsI and CuI Photocathodes for Soft X-ray Diagnostics", Appl. Opt. 19 , 749(1980).

9. L.R. Canfield, R.G. Johnston, & R.P. Madden, "NBS Detector Standards for the Far Ultraviolet", Appl. Opt. 12, 1611 (1973).

Other References on file:

1. J.G. Timothy & R.P. Madden, "Photon Detectors for the Ultraviolet and X-ray Region", Handbook on Synchrotron Radiation, Vol. 1 pp. 315-366 (North-Holland 1983).

2. E.B. Saloman, S.C. Ebner, & L.R.Hughey, "Vacuum UV and Extreme UV Radiometry Using Synchrotron Radiation at the National Bureau of Standards", Optical Engineering 21, 951 (1982).

3. E.B. Saloman, S.C. Ebner, & L.R. Hughey, "Radiometry Using Synchrotron Radiation", Proc. of SPIE Symposia 279, 76 (1981).

4. H. Kaase, K.H. Stephen, W.M. Burton, A.T. Hatter, A. Ridgely, L.R. Canfield, & R.P.Madden, "Intercomparison of Radiometric Irradiance Scales in the 90-250 nm Wavelength Range", Appl. Opt. 19, 2529 (1980).

5. E.B.Saloman, "The Use of Synchrotron Radiation for Detector Calibrations", Proc. of the Nat. Conf. on Synchrotron Radiation Instrumentation", Nucl. Instr. Meth. 172, 79 (1980).

6. R.P. Madden, "Availability of NBS Radiometric Standards for Solar Irradiance Studies", Proc. Workshop on Solar UV Irradiance Monitors, 79 (1980).

7. E.B. Saloman, "Typical Photoefficiency Between 20-250 eV of Windowless XUV Photodiodes with Tungsten and Anodized Aluminum Oxide Photocathodes", Appl. Opt. 17, 1489 (1978).

8. R.P. Madden, "The Availability and Development of NBS Radiometric Standards", The Solar Output and Its Variation (Colorado Assoc. Univ. Press 1977).

9. E.B. Saloman, "Time Response of NBS Windowless XUV Radiometric Transfer Standard Detectors", Appl. Opt. 14, 1764 (1975).

10. E.B. Saloman, D.L. Ederer, & R.P. Madden, "Radiometry in the EUV Spectral Region: Standard Sources and Detectors" Proc. IV Inter. Conf. on VUV Radiation, 798 (1974).

11. R.P. Madden, "Absolute Detectors and the Transfer Standard Problem in the Vacuum Ultraviolet", Calibration Methods in the UV and X-ray Regions of the Spectrum Symposium, Munich (1968).

12. L.R. Canfield & R.P. Madden, "Status Report: NBS Far Ultraviolet Transfer Standard Detector Program Middle Atmospheric Program Handbook"

BIBLIOGRAPHY

DUOPLASMATRON LIGHT SOURCES

1. C.D Moak, H.E. Banks, J.N. Thurston, J.W. Johnson, & R.F. King, "Duoplasmatron Ion Source for Use in Accelerators", Rev. Sci. Instr. 30, 694 (1959).

2. J.A.R. Samson & H. Liebl, "Duoplasmatron as a Vacuum Ultraviolet Light Source", Rev. Sci. Instr. 33, 1340 (1962).

3. C.M. Braams, P. Zieske, & M.J. Kofoid, "Composition of Noble Gas Ion Beams Produced with a Duoplasmatron", Rev. Sci. Instr. 36, 1411 (1965).

4. J.A.R. Samson, "Techniques of Vacuum Ultraviolet Spectroscopy", Chap. 5. (Wiley 1967).

THERMOPILES

1. R.G. Johnston & R.P. Madden, "On the Use of Thermopiles for Absolute Radiometry in the Far Ultraviolet", Appl. Opt. 4, 1574 (1965).

2. L.R. Canfield, R.G. Johnston, K. Codling, & R.P. Madden, "Comparison of an Ionization Chamber and a Thermopile as Absolute Detectors in the Extreme Ultraviolet", Appl. Opt. 6, 1886 (1967).

ION CHAMBERS

1. J.A.R. Samson, "Absolute Intensity Measurements in the Vacuum Ultraviolet", J. Opt. Soc. Am. 54, 6 (1964).

2. J.A.R. Samson & G.N. Haddad, "Absolute Photon-flux Measurements in the Vacuum Ultraviolet", J. Opt. Soc. Am. 64, 47 (1974).

Appendix A

FORM NBS—259
(REV. 12-78)

U.S. DEPARTMENT OF COMMERCE
NATIONAL BUREAU OF STANDARDS
WASHINGTON, D.C. 20234

533.04 **REPORT OF TEST** September 9, 1985

for
ABC Corporation

Sample:

Far ultraviolet photodiode, EVSD model 54-0-000, serial no. XXX-X. No previous NBS Report of Test.

Method of Calibration:

Direct comparison of photocurrents with NBS-calibrated secondary standard photodiode of the same type, both detectors housed within the same vacuum chamber. The beam on the sample photocathode was approximately 4 x 5 mm, centrally positioned at normal incidence. The sample photodiode was operated with the anode 150 V positive relative to the cathode and guard rings; photocurrent was measured in the cathode circuit.

Results: (EVSD Model No. 54-0-000 photodiode, serial no. XXX-X, calibrated 9/85.)

Wavelength (Å)	Quantum Efficiency (x100)	Probable Error (%)
1164	4.02	6
1180	4.06	6
1216	6.61	6
1254	8.86	6
1354	9.17	6
1403	8.00	6
1441	7.62	6
1487	7.30	6
1545	7.98	6
1608	9.82	6
1648	11.40	6
1700	13.84	6
1750	16.10	6
1823	18.11	6
1879	18.76	6
1937	18.98	6
2000	18.63	6
2067	18.19	8
2138	17.77	8
2214	17.00	8
2296	16.30	8
2385	15.18	10
2537	14.04	10

Discussion: The true value of quantum efficiency is within the "probable error" of the quantum efficiency quoted, with a probability of 0.5. The probable error is an indication of the accuracy of this calibration when transferred from NBS only if the following conditions are met.

1) The sample photodiode must be one of the NBS transfer standard photodiode types. Acceptance by NBS of an alternative type for calibration does not necessarily imply equality of merit as a transfer standard.

2) The window of the sample must not be modified (e.g., by contamination, polishing, etc.) and the device must be used in accordance with experimental procedures which will not tend to degrade the calibrations.

In addition to the probable errors given above, an additional error may arise from drifts of quantum efficiency after the NBS calibration. While experience has shown that the magnitude of such drift at any wavelength is not likely to exceed 3% of the quantum efficiency per year in 90% or more of the photodiodes, periodic recalibration by NBS is strongly recommended.

Measurements associated with this calibration were made by:

_____
L. Randall Canfield
(301) 921-2031

Report of this calibration approved by:

_____
Robert P. Madden
Group Leader, 533.04

For the Director

_____
William R. Ott
Chief, Radiation Physics Division

Order No.: ABC123
Test No.: XXX-X/85-1
Date: September 9, 1985

FORM NBS—259
(REV. 12-78)

U.S. DEPARTMENT OF COMMERCE
NATIONAL BUREAU OF STANDARDS
WASHINGTON, D.C. 20234

533.04 July 1, 1986

REPORT OF TEST

for

ABC Corporation

Samples: Far ultraviolet photodiode, windowless, Al_2O_3 photocathode, NBS serial no. 123. No previous NBS Report of Test.

Method of Calibration: Direct comparison of sample cathode photocurrents with NBS-calibrated secondary standard windowless photodiodes, with sample and standard housed within the same vacuum chamber. The sample cathode was not cleaned before calibrations. The anode of the sample photodiode was operated at 60.0V (160Å-1216Å) or 100.0V (50Å-150Å) relative to the photocathode, which was at ground potential. The beam size on the photocathode was 6 mm x 6 mm (519Å-1216Å) or 2 mm x 2 mm (50Å-500Å).

Results: (NBS windowless Far UV Photodiode, serial no. 123, calibrated April, 1986).

Wavelength (Å)	Quantum Efficiency (x100)	Probable Error (%)
50	3.66	15
55	4.99	10
60	6.25	10
65	7.19	10
70	8.07	10
75	8.80	10
80	9.43	10
85	9.85	10
90	9.99	10
95	10.37	10
100	10.56	10
110	10.31	10
120	11.55	10
130	11.07	10
140	8.98	10
150	9.04	10
160	8.61	10
170	7.48	15
180	7.54	10
190	7.59	10
200	7.56	10
210	7.84	10
220	8.02	10
230	8.33	10
240	8.53	10
250	8.76	10
260	9.04	10
280	9.29	10
300	10.03	10
320	10.53	10
340	11.22	10
360	11.68	10
380	11.90	10
400	11.82	10
420	11.76	12
440	11.76	12
460	11.80	12
480	12.05	12
500	12.60	12
519	13.68	8
537	14.58	8
556	14.38	8
584	15.75	8
599	15.92	8

Wavelength (Å)	Quantum Efficiency (x100)	Probable Error (%)
622	16.88	8
639	17.60	8
657	17.83	8
669	17.94	8
683	17.81	8
699	17.42	8
712	17.39	8
735	16.43	8
752	15.57	8
771	14.68	8
800	13.35	8
818	12.41	8
844	11.54	8
865	10.91	8
886	10.32	8
920	9.39	8
1026	5.02	8
1216	1.11	8

Discussion: The true value of quantum efficiency is within the "probable error" of the quantum efficiency quoted, with a probability of 0.5. The probable error is an indication of the accuracy of this calibration when transferred from NBS only if the following conditions are met.

1) The sample photodiode must be one of the NBS transfer photodiode types. Acceptance for calibration by NBS of an alternative type does not necessarily imply equality of merit as a transfer standard.

2) The sample photocathode or window must not be modified (e.g., by contamination, polishing, etc.) and the device must be applied in accordance with experimental procedures which will not tend to degrade the calibrations.

In addition to the probable errors given above, an additional error may arise from drifts of quantum efficiency after the NBS calibration. While experience has shown that the magnitude of such drift at any measured wavelength from windowed photodiodes is not likely to exceed ±3% of the quantum efficiency per year in 90% or more of the photodiodes, periodic recalibration by NBS is strongly recommended. Since environmental conditions can directly affect the quantum efficiency of windowless photodiodes, it is most difficult to predict the anticipated drift, and frequent recalibration of these photodiodes is urged.

Measurements associated with this calibration were made by

L. Randall Canfield
(301) 921-2031

Nils Swanson
(301) 921-2031

Report of this calibration approved by

Robert P. Madden
Group Leader, 533.04

For the Director

William R. Ott
Chief, Radiation Physics Division

Order No.: ABC123
Test No.: 123/86-1
Date: July 1, 1986

Appendix B

DETAILED OPERATION OF SURF-II DIODE CALIBRATION SYSTEM

Calibration Sequence

In order to be able to calibrate outgoing photodiodes, a calibrated working standard must exist. The procedure enabling one to achieve this involves the use of the rare gas ionization chamber. Once such a working standard has been calibrated, outgoing photodiodes may be calibrated by direct comparison with the working standard.

Ion Chamber

The rare gas ion chamber is operated in two modes: as a double ionization chamber with two equal length ion collector plates, and as a single ionization chamber with these two plates connected together. Two rare gases are used: Ar for wavelengths longer than 15 nm, and Ne for all wavelengths, giving some redundancy of data. The sequence of data acquisition is logically SIC first (at two low pressures-10 and 20 microns, for example) with one of the two gases, then DIC with the same gas. (Since it is necessary to change isolation filters, and hence break the previous gas seal when changing wavelength ranges, only one spectral region - determined by grating choice - can be done with a single gas filling.) In all modes of ionization chamber operation the actual calibration is that of monitor photodiode with its filter relative to the flux entering the ion chamber (through the gas sealing filter).

Working Standard Photodiode

A photodiode located on the intercomparison wheel behind the ion chamber region is designated as the working standard, and the calibration of this detector is accomplished by intercomparison with the monitor/filter combination which has previously been calibrated via the ion chamber. The same gas sealing filter which was used during ion chamber operations must, of course, be in place.

Outgoing Photodiode Intercomparisons

The working standard is located in position 1 on the intercomparison wheel with the gas sealing filter in place, and the ratio of the photocurrents of sample(s) to the standard as a function of wavelength is determined. (The monitor/filter need not be a part of this measurement.)

VOLTAGES & PRESSURES

The following have been established as "normal" operating levels for bias voltages and ion chamber pressures:

Unit	Wavelengths (nm)	Bias (v)
monitor	15-60	60
	5-15	100
wkg std	15-60	60
	5-15	100
samples	15-60	60
	5-15	100
mon fltr	all	140
SIC (Ne)	5-6.5	335
	7-8.5	300
	9-15	150
	15-20	80
	21-60	50
DIC (Ne)	3-15	10
	15-60	40
DIC (Ar)	15-60	50

Mode	Wavelengths (nm)	Pressure (torr)
SIC (Ne)	all	0.01, 0.02
DIC (Ne)	3-15	0.8, 2.0
	15-60	0.5-1
DIC (Ar)	15-60	0.5-1
		(none critical)

DATA REDUCTION

The program CALRED.BAC is used for all aspects of data reduction and is menu-driven. The logical sequence in each spectral range follows:

1. Extrapolate 2 SIC runs to 0 pressure.
2. Calculate secondary ionization factor ("C"). Edit as required.
3. Calculate fraction of 1st order ("F"). Edit as required.

---

4. Calculate QE of monitor over entire range (data from 1.).
5. Calculate QE of standard over F=1 portion of range.
6. Calculate QE of standard over balance of range.

---

7. Calculate QE of samples over entire range.

Steps 1-7 must be done in order. The results of step 1 are needed (with DIC data) to arrive at "C", which in turn is needed to arrive at "F". The results of step 4 are needed to accomplish step 5; steps 4 & 5 are needed to accomplish step 6. Likewise the results of steps 5 & 6 are needed for 7.

INITIALIZING

Wavelength Drive

Note: before running this routine, grating to be used must have been selected and masks set to give proper illumination.

Menu item #29. After selection of item, at experiment turn on wavelength drive power supply, press command button. Program sets trial shaft encoder zero, scans to what it thinks is zero wavelength and stops. Turn off wavelength drive supply, manually scan into zero (as observed by monitor diode) from below and press command button. Program records correct encoder zero, scans to about 80Å (1200/mm grating) and stops. Note proper electrometer scale at manually-selected peak, press command button and sequence terminates. Encoder zero is K1.

Diode Wheel

Menu item #22. Before selecting this item, preset diode wheel a little clockwise from #1 position ("1/4") and turn on diode wheel power supply. Select item and program will microstep wheel until proper registration for #1 diode is reached (max 300 steps). Displays "#1 diode in beam" after locating it - if no display, registration is incorrect.

CALIBRATING

Electrometers

Menu item #24 (uses overlay subroutine). Select item, enter as prompted, printout will give detailed instructions for ranges and no. of electrometers selected. (Note that channel allocations must agree with program channel assignments.) Variables are C1(2)...

Barytron

Menu item #27. Select item, screen prompts. Variable for calibration is B1(counts/torr). Note that if both SIC and DIC runs are to be made in sequence that the Barytron will have to be pre-calibrated on two ranges, which involves two iterations of this routine. The appropriate value for B1 will have to be entered manually.

VARIABLE STORAGE & RECOVERY

Calibration variables may be displayed, stored or recovered from menu. After initializing & calibrating, it is good practice to store these.

CHANNEL ASSIGNMENTS

```
SIC      ch 2: SIC (both plates together)
         ch 3: mon diode
DIC      ch 2: plate 1
         ch 3: plate 2
         ch 4: mon diode
cal std vs mon      ch 2: mon diode
                    ch 3: std diode (wheel)
cal diodes
         ch 2: diode wheel
```

FILTERS

Filters are used at two places in the system: just ahead (toward mono) of the monitor diode and at the entrance to the ion chamber area. The monitor filters (Al and polypropylene) are pneumatically inserted by the program, but the selection of the proper filter for the wavelength range in use is done manually. A u-shaped stop can be snapped over the actuator shaft to limit its travel; this will give the Al foil when actuated. Otherwise, polypropylene is in. The ion chamber filter (which must also be used for anything involving diodes on the rear wheel) is manually inserted. The actuator has three positions: fully up is an Al filter, fully down is polypropylene, and the midpoint (with the handle resting on a snap-in aluminum angle support) allows light past with no filter. Status switches monitor the position of this actuator. It is important that this actuator be handled carefully, and that the motion in the external guide be with gentle force toward the rear of the system. It is also very important that the actuator be left in the mid position when not actually in use. Failure to do so may result in a ruptured filter.

GAS HANDLING

To prepare for any ion chamber measurements, the gas supply system connected to this housing must be charged with pure gas. The experimental system is prepared for ion chamber runs by placing the filter to be used in position and sealing it by use of the linear feedthrough on the front flange of the foil chamber. The pneumatic valve over the CTI cryopump is opened and the manual gate valve over the ion pump is fully closed. The G-P metering valve is then used to bring the chamber region to the desired pressure (as monitored by the Barytron).

To return the system to high vacuum following a run, close the metering valve ("30" on the readout is fully closed), close the pneumatic valve over the cryopump, close the 2" valve on the mono exit arm and turn off the ion gauge in the foil chamber. Place the manual foil changer in the mid position, allowing the ion chamber gas to diffuse into the entire experimental system. Remove gas from the system using roughing pumps attached. In the case of Ne, it is necessary to flush the system with dry nitrogen several (at least 3) times to reduce the partial pressure of Ne and avoid swamping the Vacsorbs. (This technique is also necessary when purging Ne from the supply lines.) It still may be necessary to bake the Vacsorb after this use. When the thermal gauge on the roughing system reads about 2 microns, it should be possible to begin to open the gate valve over the ion pump carefully. Crack the valve, watching the pressure scale on its supply and not allowing the indicated pressure to rise above 4×10^{-5} torr. When the roughing gauge pressure is observed to be dropping further the roughing valve on the side of the ion chamber may be closed, and it should be possibe to gradually open the gate valve. As soon as this is possibe, the cryopump valve should be opened to reduce the load on the ion pump.

OPENING BEAM LINE

Before considering opening the BL-9 gate valve (controls on interlock panel) the monochromator must be on the 10^{-9} range and must have passed RGA since last being open for test. A spot check of the hydrocarbon peaks may be made at any time via the integral mass spectrometer in the monochromator; the peak at an indicated mass reading of 40.7 tends to be the greatest magnitude. The nude ion gauge in the monochromator provides the interlock for the BL-9 valve, and should be set on the 10^{-8} range.

STEPPING MOTOR SUPPLIES

Both the wavelength drive and the diode wheel are driven by stepping motors with separate supplies. These are under computer control and the front panel overrides on each supply should not be used, since it would be easy to drive either beyond the physical limits which should be observed. There are no limit switches which act directly on the supplies. These supplies should be turned off during SURF-II injection periods, or any other time they will not be used for an extended period.

Appendix C

THERMOPILE CALIBRATION PROCEDURE

I. Turn on light source

1. Outgas filament 15 A. (flap valve closed)

2. Open Kr valve slowly, press.about 2-3 x 10^{-5} Torr

3. Turn up minor arc to over 0.2 A.

4. Start major arc. Raise Variac quickly to get current started. Set about 1.5 A., voltage about 40 V. Lower filament about 2 A. Turn off minor arc.

5. Set w.l. on grating drive: He 584.3 angstroms; Ne 735.9 angstroms; Ar 919.8 angstroms (+ offset). Set on peak of line.

6. For He: Close Kr valve, let in He to about 0.8 x 10^{-4} Torr. (80 V. arc voltage)

   Ne: Let in Ne to about 8-10 x 10^{-5} Torr, then valve off Kr. Adjust pressure to about 1.1 x 10^{-4} Torr (corresponds to 9.5 Torr on G.P. gauge in gas manifold). Arc about 65 V.

   Ar: Let in Ar slowly to 8-10 x 10^{-5} Torr, then valve off Kr. Arc about 45 V.

7. Let stabilize - readjust major arc, filament.

NOTE: Don't run He next after hydrogen. Try Argon. Slit should be open 1 1/4 turns = 250 microns. Slit closes when micrometer knob under light source is turned cw looking from above.

II. Electronics

1. Test calculator when turned on (i.e. 3 x 2 = , etc.).

2. Load program 070M @ 00 (4 cards). Enter "Ju 00", then load cards. Idle light goes out while cards are being read.

3. Open butterfly valve on 2" pump.

4. Turn on: Kepco P.S. to 22 V. (ion chamber voltage).
   Two scanners, both on remote
   Sin/cos stepping motor drive
   0.05 microvolt test signal (battery off)
   Left hand Keithley on 0.3 x 10^{-8} range + mode
   Anadex 10 V. range
   Monsanto counter Hz-sec range, divide by 5, square wave, Freq. A
   Chamber flap valve open

If necessary, adjust slit width by reading residual ion chamber current on electrometer, setting right hand scanner to #1.

III. Data Acquisition

1. Both flaps wide open (entrance and exit slits), not tripped.

2. TC trip settings raised on both pumps

3. Gate valve closed 2" pump (control panel switch down)

4. Manually place TP up, close to switch. Turn on motor. Subroutine at "Chg Sgn 00" will step up TP in 10 step increments. Press RESET to stop TP when it is just touching switch.

5. Lower TP using "Ju IS+"

6. Check both stepping motors on.

7. Enter "Ju 00", Resume - Mantissa of pressure is read and printed. Halts.
   Enter date (2 digits for day of month). Resume. Gate valve opens, enter wavelength, Resume. Enter base pressure w/exponent, Resume. Halts for system check.

8. Resume starts run. 60 minutes running time.

9. Also, lowering TP by "Ju IS+" will start program at 00.

   A. Clear X or Reset closes all valves.

   B. Lower TP by using "Ju IS+"

   C. Repeat a run or start a new run using previous TP background and test signal data. Enter "0", Resume. Calculator prints date, opens gate valve. Enter wavelength, Resume. Enter base pressure w/exponent, Resume, and calculator prints averages of previous TP background and test signal data, closes gate valve, and begins ion chamber measurement with flap valve closed. (can do "Ju 00" to get a new background pressure, then "0", Resume to reuse previous TP background and test signal).
   If ERROR comes up (light flashes on keyboard), push "Clear X" and retype entry. Gate valve is closed for next step anyhow.

PROGRAM 070M - THERMOPILE-ION CHAMBER CALIBRATION

Running Time 60 minutes

#1 TP raises, flap valve closes. TP background. 5 sets of sum of 10 readings.

#2 TP test signal, as above.

#3 Ion chamber. TP lowers, gate valve closes. Lets in gas for 90 seconds.

#1 on paper tape

#4 Shuts gas valve, pumps out ion chamber. Waits 40 seconds, repeats TP background.

#5 Flap valve opens - TP signal

#3 Ion chamber

#2 on Tape

#4 Pumps out chamber, TP background

#5 TP signal

#3 Ion chamber

#3 on Tape

#4 Pumps out chamber, TP background

#2 TP test signal.

Flap valve closed at finish of run. Program prints out summary, F values, Mantissa of base pressure.

	LH Scanner Channel	RH Scanner Channel
TP background	2	-
TP Test	2	-
I.C. Plate #1	1	1
I.C. Plate #2	1	2
TP background	2	1
TP signal	2	1

THERMOPILE-DIODE CALIBRATION

I. Cover on glass window. 23 w.l. in 1164-2537 angstrom range.
Open 2" butterfly valve, turn on electronics.
Open gate valve.
Raise main chamber TC gage trip setting.
Check TP down, light source flap closed to light.
Open TP flap valve.
Set diode voltage 150 V. EMR (5 digit no.) or EVSD (4 digit no.);
60 V. SEL (3 digit no.)

II. Turn On Light Source (exact procedure may vary)

1. Outgas filament 15 A.

2. Let in Kr 2-3 x 10^{-5} Torr.

3. Turn up minor arc to above 0.2 A.

4. Start major arc. Raise variac quickly to get current started. May need maximum minor arc current or higher filament current. Set to 1.5 A., about 40 V. Filament about 14 A.

5. Turn off minor arc.

6. When stable, valve off Kr, let in hydrogen about 1.1 x 10^{-4} Torr. Reduce I(major arc) to 1.1 A., 100-130 V. Set filament about 14 A.

III. Initialize data acquisition system

1. When stable, set w.l. and Keithley range. Diode current read for R.H. Scanner on #1. Proper diode voltage on. (TP signal for #2 Scanner). L.H. Scanner chooses output to Anadex: #1 for Keithley, #2 for Perkin-Elmer amplifier.

2. Check slit width is proper. For 1164-1608 Angstroms, slit open 1/4 turn = 50 microns. For quartz region above 1608 Angstroms, open slit 1 to 1 1/2 turns = 200-300 microns.

3. Turn on calculator, test by 2 x 3 =, etc.

4. Load data cards:
   a) 1164-2537 Angstroms as data: rcl[][]96

   b) Diode card for diode being tested
      Permanent data at rcl[][]32 A side
      Temporary data at rcl[][]64 B side

5. Load 5 program cards @ "Ju 00" (Program 068M)

6. "Ju Chg Sgn 50" (address 2500) raises TP in 10 step increments. Stop by pressing Reset.

7. "Ju IS+" lowers TP.

8. "Ju IS Read" opens flap as part of "0 Resume". See #5 below.

IV. Program 068M (Runs 43 minutes)

1. TP lowered, both flaps open, scanners remote, gate valve open, stepping motors on.

2. Start with "Ju 00, Resume".
   Enter date(2 digits for day of month)
   Computer returns diode no., wavelength and photoelectric correction.
   Enter F value, Resume.
   Enter full scale Keithley range, Resume. Must be not greater than 3×10^{-9} A.
   Computer prints Keithley range K factor and line of dots.

(Program reads temporary data file to see what starting w.l. should be. Can start at any w.l. by inserting a QE into the data register for the previous w.l., if registers for longer w.l. are empty.)

(Permanent data card contains diode no. and photoelectric correction).

3. Calculator halts for check of system parameters (idle light comes on).

4. Press Resume to start run.
   Takes data
   1) TP background 2) TP test signal 3) Diode background
   4) Diode signal 5) TP background and signal.
   Does 3 diode measurements around 2 TP measurements. Finishes with TP background and test signal, with TP lowered and flap valve closed at end.

5. When finished and ready for next wavelength "0 Resume"; will reuse last TP background and test signal. To repeat a wavelength, enter "-1 Resume". Will proceed as for "0 Resume", but at the old w.l. Can go backwards in w.l. by doing "-1", Resume twice. Deletes QE from preceding w.l.

6. After "0" or "-1", Resume, prints date and diode no., then w.l., photoelectric correction, and present F value. Halts to wait for Keithley range input with flap open and TP lowered. Try to keep diode current midrange on 3×10^{-10} range for good TP signal.

7. Here can set new w.l. and check Keithley diode current reading.

8. Enter Keithley range, Resume. TP raises, then flap valve closes, then prints a line of dots.

9. Waits for a Resume to start data collection. TP lowers, prints averages of previous TP background, test signal, and net test signal.

10. Takes diode background, then diode signal, continues.

NOTE: TP signal should be over 10% of TP test signal for adequate S/N ratio. 20% is better.

At the end of a day:

Enter new temporary data on card; do rcl[][]64, switch to "WRITE", and insert B side of diode data card. Switch to "READ".

To dump data summary, "Ju IS exp(x)", Resume prints out results from 1164-2537 Angstroms.

After last w.l. (2537 A), update permanent data card:

1) "Ju IS (x-y axes), Resume" prints out for each w.l. the % difference between previous average Q. Eff. and the present Q. Eff., the new average Q. Eff., and the new standard deviation.

2) Then rcl[][]32, switch to "WRITE", insert A side of diode data card to update permanent data. Switch back to "READ".

Appendix D

DIODE CALIBRATION PROCEDURE

Initializing system

Sequence:

1. Perform light source startup (vacuum)
2. Turn on all electronics (left scanner on ch.3)
3. Vent experimental chamber
4. Load samples (blow off dust)
   (if sample diode from customer, clean window)
5. Evacuate experimental chamber
6. Connect cables, turn on diode voltage(s)
7. Perform light source startup
8. Load data acquisition programs and data
9. Initialize experimental module
   flap open (don't trip limit switch)
   standard in beam (line up red arrows)
   filter(s) out of beam
10. Set monochromator wavelength and slits
11. Open light source flap, unlock picoammeter input
12. Fine-adjust first wavelength
13. Turn on stepping motor supplies (3)
14. Check that all above have been done

Running program

Sequence: See instructions for particular program

Terminating

Sequence:

1. Turn off light source power (not cooling)
2. Turn off light source gas(es)
3. Turn off stepping motor power (3)
4. Lock picoammeter input
5. Turn diode voltage(s) to zero
6. Perform associated program routines (such as printout, analysis, graphics, data storage)
7. Vent experimental chamber and remove diodes
8. (Reload) replace diode module and evacuate
9. If running again, re-enter initializing sequence at item 6.

PROGRAMS FOR DIODE INTERCOMPARISON ANALYSIS

5-JUN-84

Plotting running ratios vs time

```
Cards: 075
       049
       Ref ratio data card (# lower left of plot)
       Data card for last point previously plotted
       Data card(s) for subsequent data

Prep: 1.  calculator & plotter on
      2.  appropriate plot aligned on plotter
      3.  (x,y)min,max set on plotter
      4.  load cards:  075-ju 00 (2 cards)
                       049-ju .02
                       ref data rc1.92

Running: 1.  ju 00,(res),enter: sample #(res)
                                std #(res)
                                1st year of plot (2 digits)(res)
         2.  load last prev data(res)
         3.  load newer data(1 or more)(res)
         4.  after last data, ju symb 0 to plot
                (flag if new plot to generate tic marks)
Note: In the case of diodes calibrated using 2 standards, it
      may be necessary to manually change the standard id
      on the card to agree with that entered at the start--
      if two lines of dots after feeding in data card, you
      can inspect the exact format of the reference id by
      rc16,Prx.  The format of the id on the card just fed
      in can be inspected by rc130,Prx.  If they don't agree
      due to 2 standards, changing the format of reg 30
      so that it agrees with reg 6 will cure the problem.
```

Analyzing ratios with previous history

```
Cards:  072 (in anal loose-leaf)
        appropriate intercomparison data card
        appropriate new data card
        023 (wavelengths)

Prep: 1. calculator on
      2. load cards:  072-ju 00
                      intercomparison data-rc132
                      wavelengths-rc100
                      new data-rc196
```

Running: (if new ratios are 1/x, flag)

1. ju 00(res)-auto to end
   (if either data card disagrees with the other, error
   -if so, clear, re-store both data cards
2. at end, re-record intercomparison card:
   rc132(write pos) enter card (return to read pos)

PHOTOCATHODE UNIFORMITY PROGRAM

Loading photodiode:

1. Mount photodiode to be studied on x-y module holder slide holder toward mask with pinhole until face of photodiode is about 3/4" from mask, lock holder in position with allen screw.
2. Make normal electrical connections to photodiode (red is anode) and check continuity.
3. Mount module on experimental chamber and evacuate.

Initializing:

1. Start light source as usual.
2. Set monochromator wavelength and slits to give reasonable current on $3x10^{-10}$ scale or a little higher if 1216.
3. Manually find edges of photodiode by scanning in x direction until current is about half of peak.
4. Calculate central position based on these readings, write down, do same for y direction.
5. Leave in center, leave source flap half closed.

Note: Stepping motor cable connector (large) must be changed to "xym" pairing fo x-y module, and limit stop connector to "xyls" pairing. Also clip grounding wire to convenient ground.

Loading program: Ju 00, load 056 program (3 cards)

Running: Ju 00(res)

Enter: date
sample #
wavelength (normal:1216,1403 & 1608)
# of elements (pixels) per line-usually 10
# of stepping motor steps per increment-150 for 1mm incr
ratio of #y lines to #increments-usually 1

1. Manually scan to starting position: if doing 1cm x 1cm scan, .090" from center on indicator in both x and y toward the upper right.
2. Turn on stepping motor power supplies for x and y motors, and open source flap.
3. "Resume" will start main program--program uses a ref

point (the starting position) after each line to check for light source drift and make any necessary corrections. The magnitude of the change relative to the original value is printed out after an identifier giving the line number. The magnitude of the change shouldn't be as large as .01 per line- if it is, start over. All data is stored for plotting at 00 (can be transferred to cards for later plotting or used right away).

4. After the final line is scanned, the drive returns to nominal center and the normalized data is printed.
5. Close source flap half way and turn off stepping motors. If no more data will be taken, turn off source.
6. To record the data from 100 pixels (10x10) it is necessary to use both sides of 2 cards.
   °00, "write", feed in cards, "read".

PLOTTING PHOTOCATHODE UNIFORMITY

Loading program:
1. Ju 00, load 071 program (2 cards)
2. Ju .02, load 049 and 050 in sequence

Initializing:
1. Load wavelength code: ju 93("load") enter code from table (back to "run").
2. Load diode code: ju 94("load") enter code from table, terminate "0" (back to "run").

symbol:	0	1	2	3	4	5	6	7	8	9	-	f
code:	PrX	PrA	Rst	Clx	064	065	066	067	Sin	Sin-1	Sqrt	106
(or)	060	061	062	063					070	071	055	

(3-digit codes are entered by "enter code()()()" button, followed by the 3 digits)

Plotter: Set up plotter with 8 1/2 x 11 xerox paper, adjusted so that bottom is in normal position, and left edge is at 3.4" on scale. No need to adjust pen position.

Running:
1. If 056 program left data in calc, ju 00(res) and wait for idle light to come back on.

(OR)1. If using data from cards instead, rcl10, load data, Ju symb sin (res).

2. enter:
   X min (0)
   X max (15)
   Y min (0)
   Y max (10)
   # pixels per line (10)
   X1 (4.1)
   Y1 (9.5)
   X incr (.7)
   #Y/#X (1)

Draws grid and plots data, wavelength & id ("x" before "=" should be greek lambda-use white-out..."a" after wavelength should be symbol for angstrom units-add small "0" over it).

Note that the values shown for entries are correct for the evsd photodiode routinely scanned...other detectors will, in general, require different values.

CALIBRATION OF WINDOWLESS NBS PHOTODIODES BY A-B INTERCOMPARISON (490A-1216A)

Function:

The determination of quantum efficiency as a function of wavelength of an nbs windowless photodiode by intercomparison with a working standard photodiode previously calibrated with the ion chamber (490Å-920Å) and with the same working standard pre-calibrated vs thermopile at 1026Å and vs a windowed photodiode at 1216Å.

Module:

The a-b intercomparison module with provision for mounting two photodiodes is used (the same as for windowed photodiode calibrations).

Loading module:

Windowless photodiodes, sample and standard, are mounted at the usual locations on the rotating wheel. It is necessary to use teflon bushings to insulate each at its rear, since this is electrically the same as the cathode. Cathode connections are made by clip to the screw heads on the rear of the wheel, and anode connections to any one of the screws holding the cylindrical anode in place. Check continuity to this cylinder and to the outer edge of the cathode surface.

Loading program:

1. Main program is 065 (load @00-4 cards)
2. Load wavelengths (077b) @00 and @72
3. Load wavelength scan increments (077a) @.10
4. Load standard efficiencies (d-715)@32

Initializing module & source and monochromator:

Note: the sigma stepping motor power supply is used with this program for wavelength drive--mount stepping motor attached to the bottom power supply. Do not use the sine-cosine power supply.

1. start source on Kr, switch to He, wait until stable.
2. Set monochromator on the 537Å line of He.
3. The standard should be in the beam, the flaps open, and the instrumentation ready as for windowed photodiodes.
4. Set slits at 150 microns.

Starting program:

1. Ju 00(Res), enter: date
   sample #
   standard # (loops to 00 if wrong card)

Running program:

After successful completion of 584Å data, program will halt for a change of source gas.

1. Switch source gas to Kr, set major arc to 2 amperes.
2. When stable,(res) to continue.

Next halt will be after completion of 886Å.

3. Switch source gas to Ar, set major arc at 2 amperes.
4. When stable, (res) to continue.

Data will be taken at the Ar lines, the next halt will be after completion of 699Å.

5. Switch source gas to Ne, set mono pressure at about $1x10^{-4}$, and major arc at about 1.5 amperes.
6. When reasonably stable, (res) to continue.

The next halt will be after completion of 735Å.

7. Switch source gas to pure hydrogen (no Kr).
8. When stable at about 1.2 amps major arc, (res) to do the last 2 wavelengths.
9. After 1026Å, set Keithley to $10x10^{-10}$ scale.

At the completion of 1216Å, the program will work for a minute rearranging the sequence of the data to be in the order of increasing wavelengths, then will print out the results.

Note: to restart individual data set, replace flap and standard as initially, "reset", Ju symb 0.

If S.D. over 1%, program will halt for operator decision.

To repeat data set, Ju symb 0. To not repeat, "resume".
(1% redo seed is at program step 1034 with reentry @1040.)

Terminating program:

1. Turn off stepping motor supplies (3).
2. Turn off source (power supply and gas).

To dump data for typist: Ju symb "out" (res), set d.p., (res).
To compare to old data: load old data rc1.28 (flag if comparing qes).
Ju symb "sin" (res), enter old date, (res).
To prepare for card storage: Ju symb "read", (res), rc100, "write", enter card, "read".

ION CHAMBER/DIODE CALIBRATION

Functions:

The calibration of a windowless (NBS) photodiode in the wavelength range 496-920Å by the use of a rare gas double ionization chamber to determine the absolute flux from the monochromator. The two detectors are alternately placed in the beam; the ionization chamber calibrates the flux which then produces photocurrent from the photodiode, allowing calculation of the photodiode efficiency.

The program is arranged to proceed through the wavelengths so that each duoplasmatron source gas is used only once, minimizing source delays. The order in which the gases are used is: He,Kr,Ar,Ne. The program pauses at each wavelength requiring a gas change. The ion chamber uses Kr or Xe depending on wavelength, with the program selecting the correct gas.
Note that the program reads the ion gauge in the monochromator to enable correction for absorption losses. Therefore the ion gauge must be in good working condition and reading on the 10^{-4} scale during the ion chamber sections of the program.

Loading program:
1. Ju oo, load 062 (4 cards)
2. rc180, load wavelengths (077b)(source-pref order)
3. rc1.10, load scan increments (077a)(source-pref order)
4. Turn on scanners and 780 control unit (interface box)

Initializing module:
1. Mount diode to be calibrated on arm in ion chamber module and connect cathode and anode (anode is just lip lead to anode of ion chamber)-don't move arm.
2. Mount module on exp chamber and connect gas supply line.
3. Turn on calc, interface box and scanners.
4. Make sure both Xe and Ar supply tanks are shut off at tanks, then open each needle valve (at module) several turns.
5. Turn on the middle sigma stepper power supply temporarily & open the two solenoids by program instruction: Ju chg sgn 04(res).
6. Now pump down the exp chamber in normal fashion.
7. Leave solenoids open until high vac valve has been open several minutes, then close by clearx or reset and turn off sigma supply.
8. Set module wheel so that diode is in beam.

Note: The wavelength drive for this program uses the lowest sigma power supply. The motor attached to it must be installed in place of the sine-cosine drive motor.

Starting source: He is the first gas used in this program. start the source as usual on Kr, when it is stably on at about

2 amp major arc current, open the He shutoff valve at the manifold. The source will very likely go out. after the pressure has recovered to the previous Kr level, try the procedure again. It will take several tries before the major arc will stay on with He. When that has been achieved, turn off the Kr and try to get it to run on pure He. Unless the source has been running recently on He, it will probably take a few tries to get it stable on He only. (If it has to be restarted, just open & close the Kr to start, then open He--this minimizes the time required to pump out the Kr each time.) eventually it will run on pure He.

Starting program: gate (high vac) valve closed
exit flap closed (to pencil mark)
butterfly open
voltage set @22.5 volts
ion chamber gas needles preset to give current ratio of 3-5
diode in position
wavelength: 537Å
stepping motors:flap, wavelength (see above) and rotation--turn all on
top: flap & power for gate valve
middle: wheel rotation & power for gas valves
bottom: wavelength drive

Running:

1. Ju 00(res)
2. Enter: date
   diode #
   # runs at each wavelength (½1)
   mono base pressure
   (note that any time the source pressure is changed, it is necessary to reenter the mono pressure-- if a normal change point in program, it will be stored by the program after entry--otherwise, store at main reg 01).

   Program will do 537Å and 584Å, stopping after 584Å for a source gas change.
3. Shut off He and open Kr, setting major arc to 2 amperes.
4. Open slits to 150 microns, enter new monochromator pressure and hit resume to continue.
   If all goes well, the next program pause will be after 886Å (it may be necessary to reduce the slits to 100 microns or to raise the picoammeter scale setting at the last several wavelengths before 886Å).
5. Cut off Kr and open Ar, readjusting major arc to 2 amperes.

6. Readjust slits to 150 microns, enter new monochromator presure and hit resume. After several more wavelengths, the program will stop for a switch to Ne in the source. Ne is regulated with a needle valve only--after it is first opened and set (about $1x10^{-4}$ mono) the pressure will drop for quite a while. Keep opening the needle to keep the pressure from getting below $5x10^{-4}$ until it is falling fairly slowly if at all.
7. Enter new monochromator pressure, then resume to do 735Å, the final wavelength.

   To store data on card:rc120, "write", feed in card, "read".

Printout options:

Dump data: (set d.p.) ju symb [
Compare to old data: (store old data rc1.28) ju symb =, enter date of old data, res.

Restart options:

To restart 1st data set at present wavelength: first make sure flap, gate valve, wheel and gas handling valves are in initial position, then Ju symb +

To restart current data set: settings as above, Ju symb -