NBS MEASUREMENT SERVICES: CALIBRATION OF GAMMA-RAY-EMITTING BRACHYTHERAPY SOURCES

James T. Weaver

Thomas P. Loftus

Robert Loevinger

Center for Radiation Research
National Measurement Laboratory
National Bureau of Standards
Gaithersburg, MD 20899

NOTE: As of 23 August 1988, the National Bureau of Standards (NBS) became the National Institute of Standards and Technology (NIST) when President Reagan signed into law the Omnibus Trade and Competitiveness Act.

U.S. DEPARTMENT OF COMMERCE, C. William Verity, Secretary
NATIONAL BUREAU OF STANDARDS, Ernest Ambler, Director
Issued December 1988

Library of Congress Catalog Card Number: 88–600609

National Bureau of Standards Special Publication 250-19
Natl. Bur. Stand. (U.S.), Spec. Publ. 250-19, 60 pages (Dec. 1988)
CODEN: XNBSAV

Commercial products—materials and instruments—are identified in this document for the sole purpose of adequately describing experimental or test procedures. In no event does such identification imply recommendation or endorsement by the National Bureau of Standards of a particular product; nor does it imply that a named material or instrument is necessarily the best available for the purpose it serves.

U.S. GOVERNMENT PRINTING OFFICE
WASHINGTON: 1988

For sale by the Superintendent of Documents, U.S. Government Printing Office, Washington, DC 20402–9325

PREFACE

The calibration and related measurement services of the National Bureau of Standards are intended to assist the makers and users of precision measuring instruments in achieving the highest possible levels of accuracy, quality, and productivity. NBS offers over 300 different calibration, special test, and measurement assurance services. These services allow customers to directly link their measurement systems to measurement systems and standards maintained by NBS. These services are offered to the public and private organizations alike. They are described in NBS Special Publication (SP) 250, NBS Calibration Services Users Guide.

The Users Guide is being supplemented by a number of special publications (designated as the "SP 250 Series") that provide a detailed description of the important features of specific NBS calibration services. These documents provide a description of the: (1) specifications for the service; (2) design philosophy and theory; (3) NBS measurement system; (4) NBS operational procedures; (5) assessment of measurement uncertainty including random and systematic errors and an error budget; and (6) internal quality control procedures used by NBS. These documents will present more detail than can be given in an NBS calibration report, or than is generally allowed in articles in scientific journals. In the past NBS has published such information in a variety of ways. This series will help make this type of information more readily available to the user.

This document (SP 250-19), NBS Measurement Services: Calibration of Gamma-Ray-Emitting Brachytherapy Sources, by J. T. Weaver, T. P. Loftus, and R. Loevinger, is the nineteenth to be published in this new series of special publications. It covers the calibration of small radioactive sources used for interstitial radiation therapy (brachytherapy) in terms of the physical quantity exposure, measured in roentgens, or the quantity air kerma, measured in grays (see test numbers 47010C, 47011C, and 47040S in the SP 250 Users Guide). Inquiries concerning the technical content of this document or the specifications for these services should be directed to the authors or one of the technical contacts cited in SP 250.

The Center for Radiation Research (CRR) is in the process of publishing 21 documents in this SP 250 series, covering all of the calibration services offered by CRR. A complete listing of these documents can be found inside the back cover.

NBS would welcome suggestions on how publications such as these might be made more useful. Suggestions are also welcome concerning the need for new calibration services, special tests, and measurement assurance programs.

Joe D. Simmons
Acting Chief
Measurement Services

Chris E. Kuyatt
Director
Center for Radiation Research

Abstract. The calibration of small radioactive sources used for interstitial radiation therapy (brachytherapy) is performed in terms of the physical quantities exposure or air kerma. The calibrations are listed in NBS Special Publication 250 as 47010C, 47011C, and 47040S (formerly 8.4E, 8.4F, and 8.4A). The calibration provides the air-kerma rate (the exposure rate, before 1987 Oct 1) in vacuum at 1 meter perpendicular to the long axis of the source. ^{60}Co and ^{137}Cs sources are calibrated by comparison with NBS working standard sources of the same type, while ^{192}Ir and ^{125}I sources are calibrated by measurement in a reentrant ionization chamber that was calibrated using NBS working standard sources of the same type. The working standard sources were calibrated using the NBS graphite cavity ionization chambers except for ^{125}I, for which the NBS measurement standard was a free-air chamber. The working standard sources of the two long-lived sources have been measured a number of times over the years; the reliability of the reentrant chamber for the two short-lived sources is assured by use of sealed radium sources as a constancy check. The overall uncertainty (considered to have the approximate significance of a 95% confidence limit) is given as 2% for all the sources except for ^{125}I seeds, for which it is given as 5%, 6%, and 7%, depending on the type of seed. The stated uncertainty for ^{125}I seeds does not include possible errors due to low-energy x rays not recognized at the time the standards were established.

Key words: air kerma; air-kerma strength; brachytherapy; calibration; cesium-137; cobalt-60; exposure; iodine-125; iridium-192; radioactive source; reentrant chamber; standard; uncertainty.

Table of Contents

	Page
Abstract	iv
List of Tables	vi
List of Figures	viii
Foreword	ix
1. Introduction	1
1.1. Description of the service	1
2. Design philosophy and theory	5
3. The long-half-life radionuclides -- ^{137}Cs and ^{60}Co	8
3.1. The replacement method	8
3.2. Cesium-137	12
3.2.1. Background information	12
3.2.2. Present standards	13
3.3. Cobalt-60	15
3.3.1. Background information	15
3.3.2. Present standards	16
3.4. Uncertainty assessment for ^{137}Cs and ^{60}Co sources	18
4. The short-half-life radionuclides -- ^{192}Ir and ^{125}I	21
4.1. The reentrant chamber	21
4.2. Iridium-192	22
4.3. Iodine-125	25
4.3.1. Working procedures for ^{125}I calibration	28
4.4. Information to be recorded in reentrant-chamber calibrations	30
4.5. Uncertainty assessment for ^{192}Ir and ^{125}I	32
5. Safety considerations	37
5.1. Radiation safety	37
5.2. High-voltage safety	38
References	39

Appendix A: Adjustment of NBS exposure rates, 1986 Jan 01
Appendix B: Sample calibration report for cesium-137 source
Appendix C: Sample calibration report for iridium-192 seed
Appendix D: Sample calibration report for iodine-125 seed

List of Tables

Page

1-1. Characteristics of the radionuclides accepted for brachytherapy calibration 3

1-2. Rate constants for the brachytherapy radionuclides calibrated at NBS 4

3-1. Engraving on NBS standard ^{137}Cs and ^{60}Co sources 9

3-2. Design details for ionization chamber used for replacement-method source calibrations 9

3-3. Typical recombination data for the 2.8-liter spherical aluminum ionization chamber 11

3-4. Correlation coefficient R, and values of the slope and intercept for the relation $1/I = a + b/V$ for the normalized data in table 3-3 11

3-5. Relative exposure rates for ^{137}Cs working standards, based on 1967 measurements 13

3-6. Corrections for number 1 graphite cavity ionization chamber in 1967 and 1974 13

3-7. Measurements of the "500" ^{137}Cs working standard, in mR m^2/h . . . 14

3-8. Comparison of 1967 updated "500" source exposure data with check measurements performed in 1978 and 1983 14

3-9. Best values for ^{137}Cs working standards based on mean of three measurements of the "500" source in the period 1967-1983 15

3-10. Calibration data for two cobalt-60 sources stored in safe in Room B145, in mR m^2/h 15

3-11. Exposure data for two ICN ^{60}Co sources 16

3-12. Mean exposure rate for the two ICN ^{60}Co sources, adjusted to the 1986 standard 17

3-13. Ratios of exposure data for ICN 100 and ICN 500 derived from open-air measurements with standard chamber 50-1, and from replacement measurements in Room B145 17

3-14. Uncertainty analysis for ^{137}Cs and ^{60}Co source calibration by substitution 19

List of Tables (Continued)

Page

4-1. Constancy check of aluminum reentrant ionization chamber for the years 1977 through 1987 22

4-2. Dimensions and materials for two types of ^{192}Ir seeds 23

4-3. Reentrant chamber calibration factors at STP for ^{192}Ir seeds . . . 23

4-4. Data from calibration of a stainless-steel-clad ^{192}Ir source . . . 24

4-5. ^{125}I seed types and their associated reentrant ionization-chamber calibration factors 26

4-6. Effect of noise pick-up in high-voltage connection to aluminum reentrant chamber 29

4-7. Uncertainty analysis for ^{192}Ir source calibration with the reentrant chamber 33

4-8. Uncertainty analysis for ^{125}I source calibration with the reentrant chamber 35

5-1. Rate constants in units convenient for protection calculations . . 38

List of Figures

		Page
Figure 1.	Calibration range for brachytherapy sources	6
Figure 2.	Cross-section view of the polystyrene base that supports the 2.8-liter spherical aluminum ionization chamber	10
Figure 3.	Aluminum reentrant ionization chamber used for measurement of ^{192}Ir and ^{125}I seeds	21

FOREWORD

NBS Special Publications 250-16 and 250-19 can be considered monuments to the skill and dedication of Thomas P. Loftus. Tom came to the Radiological Equipment Section of NBS in 1951, working under Dr. Scott Smith, Section Chief, and Dr. H. O. Wyckoff, Chief, Radiation Physics Laboratory. Tom was involved with and supervised the gamma-ray and brachytherapy calibrations until NBS moved from the Washington to the Gaithersburg site in 1965. At that time he took on the added responsibility of supervising the x-ray calibration work. He continued in this capacity until his retirement in June 1984. At that time, it was necessary to document all the dosimetry calibration services, as part of a Bureau-wide program. It was evident that Tom was the ideal person to take on this job, and he was awarded a contract for that purpose. The result was six separate documents entitled "Review of Ionization-Chamber Current-Measurement Techniques in the NBS Dosimetry Group," "Ionization-Current Measurement Console Equipment," "Pre-Calibration Testing of Exposure Instrumentation," "Gamma-Ray Calibration Ranges," "Exposure Calibration of Radiation Instruments at the NBS," and "Brachytherapy Source Calibrations at the NBS."

The first five documents form the basis for SP 250-16, and the last forms the basis for SP 250-19. In order to meet the requirements for the NBS SP 250 series of publications, the Loftus material has been reorganized, rewritten in places, supplemented with additional material, and edited by P. J. Lamperti (SP 250-16), J. T. Weaver (SP 250-19), and R. Loevinger (both documents).

The final documents reflect the knowledge, skill, experience, and careful attention to detail of Thomas P. Loftus. P. J. Lamperti and J. T. Weaver, who worked under Tom for many years, wish to express here their thanks to him for the example he set while at NBS.

J.T.W., R.L., P.J.L.
December 1987

1. Introduction

This report describes the status of the calibration service for brachytherapy gamma-ray sources, as of December 1987. Section 1 defines the physical quantities exposure and air kerma, in terms of which the calibrations are performed; the quantities derived from exposure and air kerma, in terms of which the calibrations are reported; and the exposure and air-kerma rate constants, in terms of which the radiations are characterized for dosimetry purposes. Section 2 describes the two methods used for brachytherapy calibration, either direct comparison with NBS working standards using the replacement method, or indirect comparison using the reentrant (well-type) ionization chamber. Section 3.1 describes the replacement method of calibration used for the two long-lived radionuclides, ^{137}Cs and ^{60}Co. Sections 3.2 and 3.3 describe the standards and calibration details for ^{137}Cs and ^{60}Co sources, respectively. Section 3.4 covers the assessment of uncertainty for the two long-lived radionuclides. Section 4.1 describes the reentrant chamber used for the calibration of the two short-lived radionuclides, ^{192}Ir and ^{125}I. Sections 4.2 and 4.3 describe the standards and calibration details for ^{192}Ir and ^{125}I sources, respectively. Section 4.4 describes the detailed information that must be recorded with reentrant-chamber calibrations, and section 4.5 covers the assessment of uncertainty, of the two short-lived radionuclides. Section 5 covers radiation and high-voltage safety considerations. References are given at the end of the report, in the order in which they are cited. Attachments give the statements issued by NBS at the time that exposure rates were adjusted, and three sample calibration reports.

1.1. Description of the service

The National Bureau of Standards (NBS), Ionizing Radiation Division, Dosimetry Group,[1] receives a variety of small radioactive sources for calibration. These are primarily brachytherapy sources, which are sources used for interstitial or intracavity radiation therapy. (Brachy is from the Greek, meaning "near.") Some of the sources are used for calibration or other nonmedical purposes, but they are calibrated like brachytherapy sources. These calibration services are described in NBS Special Publication 250 [1][2] under Test Nos. 47010C, 47011C, and 47040S (formerly 8.4E, 8.4F, and 8.4A). Calibrations are performed in terms of the physical quantities exposure or air kerma.

The quantity exposure characterizes an x-ray or gamma-ray beam in terms of the electric charge liberated in air by ionization of air molecules. Exposure can be defined qualitatively as the total charge per unit mass liberated in free air by a photon beam. More precisely, exposure (X) is the quotient of dQ by dm, where dQ is the sum of the electrical charges on all the ions of one sign produced in air when all the electrons liberated by photons in a volume element of air whose mass is dm are completely stopped in air.

---

[1]On August 23, 1988 the National Bureau of Standards became the National Institute of Standards and Technology. On April 1, 1988 the Dosimetry Group became the Radiation Interactions and Dosimetry Group.

[2]Numbers in brackets indicate the literature references at the end of this document.

Then

$$X = dQ/dm \quad . \tag{1}$$

The SI unit of exposure is the coulomb per kilogram (C/kg); the special unit of exposure, the roentgen (R), is equal to 2.58×10^{-4} C/kg (exactly). The ionization arising from the absorption of bremsstrahlung emitted by the secondary electrons is not to be included in dQ. Except for this small difference, significant only at high energies, the exposure as defined above is the ionization equivalent of air kerma.

The quantity kerma characterizes a beam of photons or neutrons in terms of the energy transferred to any material. In the calibration service under discussion, consideration is limited to photon beams and air. Air kerma can be defined qualitatively as the total energy per unit mass transferred from an x-ray or gamma-ray beam to air. More precisely, air kerma (K_{air}) is the quotient of dE_{tr} by dm, where dE_{tr} is the sum of the initial kinetic energies of all electrons liberated by photons in a volume element of air and dm is the mass of the air in that volume element. Then

$$K_{air} = dE_{tr}/dm \quad . \tag{2}$$

The SI unit of air kerma is the gray (Gy), which equals one joule per kilogram; the special unit of air kerma is the rad, which equals 0.01 Gy.

The relationship between exposure and air kerma can be expressed as a simple equation:

$$K_{air} = X(W/e)/(1-g) \ , \tag{3}$$

where W/e is the mean energy per unit charge expended in air by electrons, and g is the mean fraction of the energy of the secondary electrons that is lost to bremsstrahlung.

The currently accepted value of W/e is 33.97 J/C [2]. The currently accepted values of g for ^{60}Co and ^{137}Cs gamma rays are 0.32% and 0.16%, respectively [3]. Then, using SI units, X is converted to K_{air} by multiplying by 34.08 and 34.02 for ^{60}Co and ^{137}Cs, respectively. The value of g is negligible for ^{192}Ir and ^{125}I, and the conversion factor is just 33.97.

Any calibration performed in terms of exposure can be converted to a calibration in terms of air kerma by use of the multiplicative constants given above. Because the SI units of exposure and (especially) exposure rate are very inconvenient, they are never used in practice, and therefore are not used in this document. The quantity air kerma is being adopted in place of exposure in virtually all countries; at the time of writing (December 1987) NBS has made the change for brachytherapy calibrations, but not for dosimetry calibrations using photon beams. The change for brachytherapy calibrations was made on 1987 October 1, after the draft of this manuscript for internal NBS use was completed. As a consequence, the material that follows is for the most part written in terms of exposure, using the special unit of exposure, the roentgen (R), but it applies equally well to air kerma, since only a

multiplicative constant is needed to convert the former quantity to the latter. While the text is simplified by using the word "exposure" to imply both physical quantities, air kerma is named explicitly when numerical magnitudes are involved, or when it seems useful to remind the reader that air kerma is also meant.

In particular, until 1987 October 1, calibrations of brachytherapy sources were provided in terms of exposure rate at one meter perpendicular to the long axis of the source, corrected for air attenuation and buildup, and room scatter. After that date, the recommendation of the American Association of Physicists in Medicine was adopted [4], and calibrations of brachytherapy sources were provided in terms of "air-kerma strength", in the SI units micro-grays meters squared per hour (μGy m^2/h). Sample calibration reports are given in the appendices.

The characteristics of the radionuclides accepted for calibration are given in table 1-1. For ^{192}Ir and ^{125}I, only sources that are the same as the standard sources in size, wall material, and source composition can be reliably calibrated. For ^{60}Co and ^{137}Cs, some variation in size and wall material is acceptable. The overall uncertainty (considered to have the approximate significance of a 95% confidence limit) of a brachytherapy calibration varies from 2% to 7% depending on radionuclide and type of source.

Table 1-1. Characteristics of the radionuclides accepted for brachytherapy calibration. Columns 2 and 3 are from reference [5].

Radio-nuclide	Principal photon energies (keV)	Half-life	Range of acceptable exposure rates (μR m^2/s)	Range of acceptable air-kerma strengths (μGy m^2/h)
^{60}Co	1173,1332	5.2714 ± 5 y	0.3 to 50	10 to 1500
^{137}Cs	662	30.0 ± 2 y	0.3 to 50	10 to 1500
^{192}Ir	296 - 468	73.83 ± 18 d	0.004 to 1	0.1 to 30
^{125}I	27 - 35	59.6 ± 2 d	0.004 to 1	0.1 to 30

Institutions submitting a brachytherapy source for calibration must be licensed by the Nuclear Regulatory Commission for possession of that source. The source must be free of contamination. Radioactive sources are received at NBS through the Health Physics Group, who perform leakage and contamination checks before the sources are released for calibration. Institutions planning to submit a brachytherapy source for calibration should first contact the appropriate person at NBS as given in the latest edition of NBS Special Publication SP 250, with regard to waiting time, turn-around time, purchase order, shipping address, and other matters listed there.

Brachytherapy sources are gamma-ray-emitting radionuclides encapsulated in a suitable metal, ordinarily chosen to be innocuous to tissue. They come in a variety of forms, often referred to as "seeds," "tubes," or "needles," but sometimes coming in the form of wire. The seeds are very small, about 1 mm or less in diameter and a few millimeters in length; the tube sources may be several millimeters in diameter and 10 to 30 millimeters in length; needles are one or two millimeters in diameter and up to 50-mm long, pointed on one end. These sources are characterized by the manufacturer and the user in terms of activity, or activity per unit length. The exact value of the activity is not relevant to the NBS calibration, but is useful in establishing the approximate exposure rate before measurement and in controlling radiation safety. The rate constants for the relevant radionuclides are given in table 1-2.

Table 1-2. Rate constants for the brachytherapy radionuclides calibrated at NBS [6]. These values do not account for the attenuation due to encapsulation, except that the radium value assumes equilibrium with daughter products and filtration by 0.5 mm Pt. Divide the tabular values in column 2 by 3.6 to obtain values in the units (μR m^2/mCi s) for comparison with table 1-1.

Radionuclide	Exposure-rate constant (R m^2/Ci h)	Air-kerma rate constant (μGy m^2/MBq h)
^{60}Co	1.307	0.311
^{137}Cs	0.3275	0.0777
^{192}Ir	0.4002	0.0948
^{125}I	0.1326	0.0314
Radium	0.825	0.195

The values of the rate constants given in table 1-2 are approximate, and should not be taken as applicable to a particular encapsulated source. The user of a brachytherapy source will take the product of the stated activity times an assumed exposure rate constant as the exposure rate at a specified distance. As a result, the exposure rate at one meter measured by NBS divided by the exposure rate constant stated by the manufacturer should agree with the stated activity, within the desired limits of accuracy. If the activity and the exposure rate constant are both stated by the manufacturer when a source is submitted to NBS, their product can be compared to the NBS calibration, and this serves as a measurement-assurance test for the manufacturer and also for NBS.

Radium is not accepted for calibration at NBS, but is included in table 1-2 for comparison with other radionuclides, because its exposure rate constant is so well known. It is commonly used as a laboratory standard of instrument stability because of its long half-life, approximately 1600 y [6].

2. Design philosophy and theory

Brachytherapy sources are provided with calibrations in terms of exposure rate at one meter perpendicular to the axis of the source, corrected to vacuum. The calibration is based on measurements of other brachytherapy sources using the NBS primary standards of exposure. The measurements using the primary standards were performed in air at distances of about one meter or less, and were corrected to one meter and for air attenuation and buildup, and for room scatter, as appropriate. Thus the calibration of a brachytherapy source is based on an indirect comparison with an NBS primary exposure standard: the user source is compared with an NBS source that has in turn been compared with an exposure standard. The comparison with an NBS source is either direct, or indirect using a reentrant chamber, depending on the half-life of the brachytherapy source.

The long-half-life sources ^{60}Co and ^{137}Cs are calibrated by direct comparison with NBS working-standard sources, using an external ionization chamber, at distances between one-half and one meter. The comparison is carried out in a concrete calibration range (fig. 1), so an appreciable amount of scattered radiation reaches the detector. The validity of the calibration depends on the fact that the NBS standard source and the source being calibrated have the same radionuclide and the same position, and are similar in size, shape, and encapsulation, so presumably the scattered radiation is the same in spectrum and in relative intensity for the two sources. The working-standard sources were calibrated in open-air geometry using the NBS cavity-chamber exposure standards.

The short-half-life sources ^{192}Ir and ^{125}I are calibrated using a reentrant (well-type) chamber (figs. 1 and 3) that was standardized using sources that had been calibrated against NBS exposure standards; the stability of the chamber is monitored by radium sources. For ^{192}Ir, the original standardization of the chamber was performed with a group of ^{192}Ir sources that had been calibrated in open-air geometry using the NBS cavity-chamber standards of exposure. For ^{125}I, the photon energy is too low for use of the cavity-chamber standards, so the chamber was standardized using a group of ^{125}I sources that had been calibrated with an NBS free-air chamber. The reentrant chamber has been standardized for three kinds of ^{125}I seeds and two kinds of ^{192}Ir seeds, which vary enough in their spectra so that there is a measurable difference in their calibration factors.

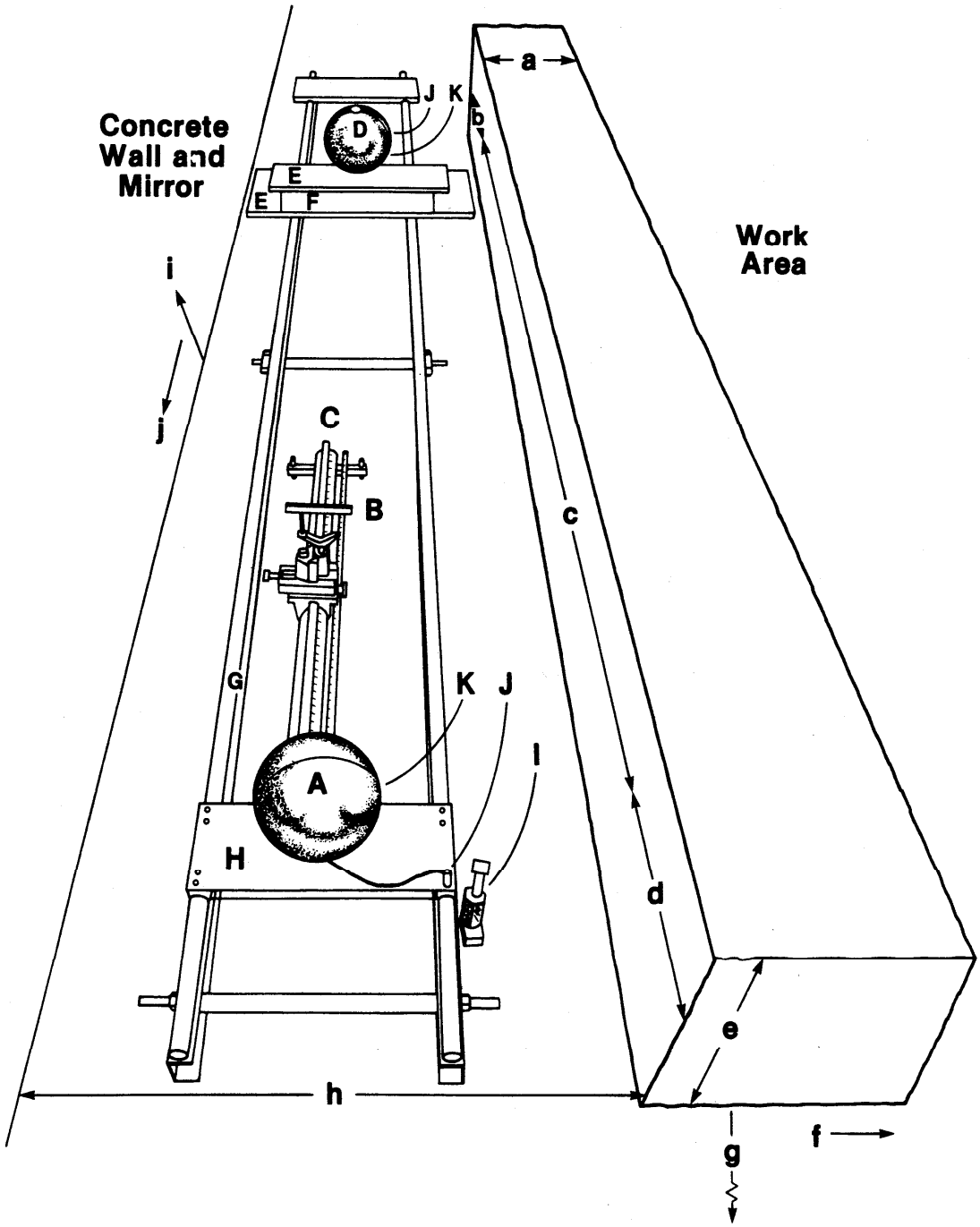
Concrete
Wall and
Mirror
Work
Area
a
b
c
d
e
f
g
h
i
j
A
B
C
D
E
E
F
G
H
I
J
J
K
K

Figure 1. Calibration range for brachytherapy sources.

A. Spherical ionization chamber for ^{60}Co and ^{137}Cs sources.

B. Source holder for ^{60}Co and ^{137}Cs sources.

C. Slide for source holder. Distance from source center to chamber center is variable from 0.5 m to 1 m.

D. Reentrant chamber for ^{192}Ir and ^{125}I source.

E. Wooden supports.

F. 70 mm foam cushion.

G. Steel support rails.

H. Steel support plate, 15 mm by 41 mm.

I. Thermistor cable for temperature measurement. Thermistor can be placed adjacent to either chamber.

J. Collection-potential cables.

K. Low-noise signal cables.

a. 30 cm, concrete barrier thickness.

b. 95 cm, end of barrier to chamber center.

c. 235 cm between chamber centers.

d. 35 cm, chamber center to end of barrier.

e. 46 cm, barrier height.

f. To storage area.

g. 94 cm to concrete wall (not shown).

h. 92 cm, width of concrete trough.

i. wall 2.7 m to ceiling, mirror 0.5 m high.

j. wall 7 m long, mirror 4.7 m long.

3. The long-half-life radionuclides -- ^{137}Cs and ^{60}Co

3.1. The replacement method

Small-source calibration by the replacement method consists of measurement of the radiation from a standard source S, and then, after replacing the standard with the unknown source U, measurement of the radiation from the unknown. The standard and the unknown source must be the same radionuclide, must be placed in the same source holder, and must be the same distance from the detector. The exposure rate at unit distance from the unknown, $(\dot{X}D^2)_u$, is directly proportional to the exposure rate at unit distance from the standard, $(\dot{X}D^2)_s$, with the constant of proportionality equal to the ratio of the mean signal I_u for the unknown, and the mean signal I_s for the standard, appropriately corrected for background b, for atmospheric temperature T, and pressure P. With the subscripts u and s referencing the unknown and standard respectively, the general equation is:

$$(\dot{X}D^2)_u = \frac{273.15 + T_u}{273.15 + T_s} \; \frac{P_s}{P_u} \; \frac{I_u - b}{I_s - b} \; (\dot{X}D^2)_s \qquad (4)$$

where T is the temperature in degrees Celsius. Since the exposure data for the standard is corrected, at the time of the original measurement, for room reflection and air attenuation, the same conditions pertain to the calibration of the unknown. The measurements are carried out in the concrete calibration range shown in figure 1. The sources and the detector are spaced between 50 and 100 cm apart, depending on the source strength. The measurement procedures and equipment details described here are common to the calibration of both small ^{60}Co and small ^{137}Cs sources.

The standard sources used in the replacement method of calibration, and the information engraved on each source, are given in table 3-1.

The radiation detector used for replacement-type calibrations is an ionization chamber. For convenience, design details for the chamber are given in table 3-2, and illustrated in part in figure 2. The chamber is of guard-ring design with the guard conducting surface interposed between the chamber wall and the collection electrode. This design allows the use of high potentials for the efficient collection of ions and prevents the addition of high-voltage-induced insulator-leakage currents to the chamber ionization current. An additional feature of the electrode-insulator configuration is the recessed high-voltage insulating surface. The insulator, being below the guard surface, cannot be "seen" by the collection electrode. This arrangement minimizes high-voltage "soakage" effects, often experienced in ionization current measurements, which are believed to be due to electrostatic distortion of the electric field by charge trapped on the high-voltage insulator.

Table 3-1. Engraving on NBS standard ^{137}Cs and ^{60}Co sources.

Source identity	Engraving on Cylinder wall	Engraving on End wall
^{60}Co "500"	ICN 2-9-76 995 500 MC CO-60	
^{60}Co "100"	CO-60 100 MC 996 2-9-76 ICN	
^{137}Cs "500"	Cs137 D49	N.C.C.
^{137}Cs "50"	Cs137 G46	N.C.C.
^{137}Cs "5"	Cs137 B48	N.C.C.

Table 3-2. Design details for ionization chamber used for replacement-method source calibrations.

Chamber*	
Shape	sphere
Material	aluminum alloy
Outside diameter	178 mm
Inside Diameter	175 mm
Wall thickness	1.59 mm
Volume	2.79 liter
Collection electrode	
Shape	cylinder
Material	copper
Length (inside)	140 mm
Diameter	3.2 mm
Volume	0.001 liter

*Chamber dimensions are computed using the measured chamber outside diameter of 7.0 in and taking the wall thickness as 1/16 in.

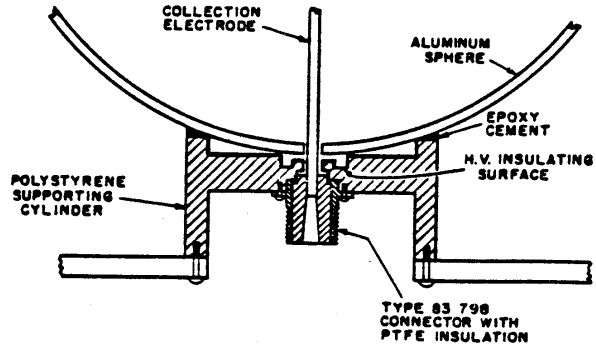

Figure 2. Cross-section view of the polystyrene base that supports the 2.8-liter spherical aluminum ionization chamber. It also provides high-voltage insulation, and supports the guard ring and the collection electrode. The heavy lines indicate where the polystyrene surfaces have been coated with colloidal graphite to make them conductive. The outside diameter of the sphere is 178 mm. From reference [7].

The chamber collection electrode extends into the sphere to within 30 mm of the chamber wall. There is no record that special precaution was taken to round off the end of the collection electrode so that at very high collection potentials there is a possibility of corona from sharp corners; however, the electric field between the end of the electrode and the surface of the sphere is only about 250 V/cm for the usual operating conditions. A much higher electric field exists between the collection electrode and the chamber wall where the electrode enters the chamber. At that point, the electric field is equal to about 7.8 kV/cm for a collection potential of 1.1 kV.

Typical data showing the recombination characteristics of the 2.8-liter chamber are given in table 3-3. Two ^{137}Cs sources different in activity by about a factor of 10 were positioned, in turn, at a distance of one meter from the chamber for these measurements. Assuming a linear relationship between the reciprocal of the ionization current and the reciprocal of the collection potential, predicted corrections for recombination from regression analysis differ by only 0.1% for these disparate currents, as shown in table 3-4. It can be concluded that the increase of current with the increase of collection potential represents initial recombination, which is independent of current, and no recombination correction is appropriate for relative measurements. Subsequent studies of the 2.8-liter chamber, e.g., that recorded in databook 870, page 25 (DB 870:25),[3] April 1986, confirm this conclusion for 3.8 pA and 33 pA, and show that the recombination correction is not more than a few tenths percent up to 185 pA. It is important in performing this type of experiment to proceed by changing the collection potential without changing the source position in order to eliminate the additional uncertainty of source non-uniformity.

---

[3]Databook references in this document are for the convenience of NBS personnel and can be ignored by the general reader.

Table 3-3. Typical recombination data for the 2.8-liter spherical aluminum ionization chamber (DB 806:27). The polarity of the chamber wall is negative. The table gives the reciprocal of the normalized current.

Collection potential (V)	Normalized values for two ionization currents. 3.8 pA	33 pA
225	1.0072	1.0105
350	1.0057	1.0062
550	1.0030	1.0026
700	1.0019	1.0030
900	1.0011	1.0013
1100	1.0000	1.0000

Table 3-4. Correlation coefficient R, and values of the slope and intercept for the relation $1/I = a + b/V$ for the normalized data in table 3-3.

	3.8 pA	33 pA
R	0.970	0.989
a	0.999	0.998
b	2.011	2.824

Before 1986 June 01, the source holder associated with the 2.8-liter ionization chamber was a PMMA (polymethylmethacrylate, Lucite) trough mounted on an optical bench. The trough was supported on both ends, such that sources up to about 50 mm in length would fit between the supporting rods. The trough wall was a few millimeters thick and the vee about 9 mm deep. The attenuation of ^{137}Cs gamma rays in the trough wall was about 2% while for ^{60}Co radiation it was 1.4%. These estimates were computed using total attenuation coefficients of 8.28×10^{-3} m^2/kg and 6.08×10^{-3} m^2/kg for ^{137}Cs and ^{60}Co gamma rays respectively [8]. The density of PMMA is 1.18 g/cm^3. In 1986 June the holder was modified to support a trough from one end only. Using square plastic tubing of the same material and wall thickness as the earlier trough, troughs were made from 1/2-inch, 5/8-inch, 3/4-inch, and 1-inch tubing by cutting away two sides leaving vees with depths of 7, 10, 12, and 15 mm. The vees are about 75 mm long, with about 50 mm of the square tubing left for attachment to the holder on the optical bench. Because the trough is supported on one end only, the source is readily viewed in the open vee, in order to keep track of rotation of the source around its axis during measurement. The attenuating effect of the trough wall, while small, is not insignificant and sources with active volumes extending above the vee of the trough should not be calibrated against standards that nest inside the vee.

The restriction on the length of a source to be calibrated is only that it fit into the trough. In the worst case, if all the activity of a source capsule 50 mm in length were concentrated at one end (25 mm off center), the geometrical error, neglecting oblique attenuation in the source and trough walls, is only 0.03% when the trough is located one meter from the ionization chamber.

The small-source calibration procedure has evolved from a replacement technique involving the gold-leaf electroscope, where the unknown and the standard were measured, ideally in a USSU or SUUS sequence, procedures that usually make sequential considerations unimportant. While the old method depended on a certain sequence of measurement to take care of effects primarily due to temperature and pressure changes, these factors are now taken into account by correcting for ambient conditions. However, the effect of trends in measurements due to unknown factors can be minimized by the proper selection of measurement sequence and the USSU or SUUS sequences are still to be recommended.

Perhaps more important than the sequence in which the readings are taken is determining the uniformity of the unknown source around its axis. If there is a mark that identifies one orientation, the source should be rotated 90° between measurements, so that I_u represents the mean of at least four orientations. If there is no such identifying mark, one can be supplied using a marking pencil, or the source can be removed and replaced several times, to obtain a random sampling of the orientations.

If the source being calibrated is not essentially the same size and shape as the NBS standard, the question arises whether the differences give rise to a significant error in the calibration. Even if all other conditions are the same for the two sources, large variations in size and shape can change the amount and pattern of radiation scattered from the walls of the concrete calibration range. Either an attempt should be made to quantify the increased uncertainty, or a statement of the problem should be included in the calibration report.

3.2. Cesium-137

3.2.1. Background information

Small ^{137}Cs sources with activities from about 3 mCi to 500 mCi (110 MBq to 18.5 GBq) are calibrated for the quantity exposure by comparison with working standard ^{137}Cs sources. The working standard sources were measured in 1967 [7] using a graphite cavity ionization chamber now identified as chamber 1 [9]. Although several sources were measured in 1967, only three, the 5-, 50-, and 500-mCi (nominal activities) sources, have continued to be used for calibrations. In order to have an unambiguous standard, these working standards were made self-consistent by taking the "500" source as the reference source against which the "5" and "50" sources were calibrated using the replacement technique. For detailed information about the graphite ionization chamber measurements of the three working standards, reference can be made to [7], but since the "500" source is used as the reference standard, only that source is used in the following review to show the effect of updating the standards. The relative exposure rates of the three working standard sources are given in table 3-5.

Table 3-5. Relative exposure rates for ^{137}Cs working standards, based on 1967 measurements.

Source	Relative exposure rates
"500"	100
"50"	10.80
"5"	0.932

3.2.2. Present standards

The NBS exposure standards for ^{60}Co and ^{137}Cs gamma rays were revised on 1972 May 01, at which time the NBS standards became the mean response of a set of six spherical graphite ionization chambers [9]. These standards are referred to as "1974 standards," from the date of publication. The chambers varied in volume from 1 cm^3 to 50 cm^3 and had either spherical caps or sets of chambers with different wall thickness, for evaluating attenuation and scatter of the radiation in the walls. The correction factors for the number 1 chamber, identified in [7] as VIII, are given in table 3-6. The ratio of the product of the correction factors in the 1974 column to that in the 1967 column is 0.9935, which is the factor used to bring the 1967 brachytherapy source calibrations into agreement with the 1974 exposure standard. Updated self-consistent exposure data for the three working standards are given in DB 806:005 (1975 Dec 31), using a half-life of 29.68 y [10]. (The half-life is discussed below).

Table 3-6. Corrections for number 1 graphite cavity ionization chamber in 1967 and 1974.

	Correction factors	
	1967 [7]	1974 [9]
Collision mass stopping power ratio (C to air)	1.010	1.0143
Wall absorption	1.025	1.0199
Stem scatter	0.999	0.9964
Recombination	1.002	1.0015
Mass energy-absorption coefficient ratio	1.000	0.9997
Center of electron production	0.998	0.9990
k_{std}	-	0.9962
Chamber volume*	-	1.0004

*The volume for chamber number 1 given in reference [7] (identified as VIII) is 1.130 cm^3. The original volume measurements were reevaluated at a later date and a lower value for volume (1.1295 cm^3) was adopted.

The NBS exposure standards were revised again on 1986 Jan 01, as described in appendix A. For ^{137}Cs gamma rays the change consisted of the introduction of a 0.3% correction for humidity, and a 0.5% change in the stopping power ratio, giving a net conversion factor of 0.992, to convert 1974 exposure rates to 1986 values.

In addition to the original measurement in 1967, the "500" source has been checked twice in open-air geometry, in 1978 and in 1983. Table 3-7 gives the original measurements and the exposure rates corrected to the 1974 and 1986 exposure standards.

Table 3-7. Measurements of the "500" ^{137}Cs working standard, in mR m^2/h.

Measurement date	Reference	Measured exposure rate	Measured exposure rate corrected to standard of 1974	1986
1967 Aug 24	[7]	136.96	136.07	134.98
1978 Apr 29	DB 805:004-7	105.17	105.17	104.33
1983 Dec 03	DB 851:036	92.55	92.55	91.81

Table 3-8 shows the 1986 exposure rates from table 3-7 corrected to 1986 Jan 01 using half-lives of 29.68 and 30.0 y, and normalized to 1978 values. (The year was taken to have 365.25 days.) Clearly the value 29.68 y brings the three measurements of the "500" source together slightly better than the now-accepted value of 30.0 y. (A least-squares fit to the data of table 3-7 gives 29.2 y.) If however it is postulated that in the "500" source there was a short-half-life contaminant which was essentially gone by 1978, the 30.0-y half-life fits the data very well. No other plausible explanation has been found for the 1-percent drift in the exposure rate of the "500" source. The standard deviation of the mean measurement was in each case less than 0.1%, so no reason has been found for assigning significantly different weights to the three values.

Table 3-8. Comparison of 1967 updated "500" source exposure data with check measurements performed in 1978 and 1983. The exposure rates have been corrected to 1986 Jan 01.

Measurement date	Days to 1986 Jan 01	Normalized exposure rates $T_{1/2}$ = 29.68 y	$T_{1/2}$ = 30.0 y
1967 Aug 24	6705	1.008	1.011
1978 Apr 29	2804	1.000	1.000
1983 Dec 03	760	1.003	1.001

The best current value of the exposure rate for the "500" source is then taken to be the unweighted mean of the three determinations. The best values of the exposure rates for the three working standards are given in table 3-9, using tables 3-5, 3-7, and a half-life of 30.0 y. Since the standard deviation of each determination is small compared to the 1% drift, the standard deviation of each value in table 3-9 is computed from table 3-8, and is 0.35% with two degrees of freedom. Calibrations performed after 1986 Jan 01 are based on the mean of the three measurements of the "500" source given in table 3-9. Calibrations performed before 1986 were based on the 1967 measurements.

Table 3-9. Best values for ^{137}Cs working standards based on mean of three measurements of the "500" source in the period 1967-1983. The data are consistent with the 1986 exposure standard, and are corrected to 1986 Jan 01 using a half-life of 30.0 years.

Source	Exposure rate (mR m^2/h)
"500"	87.7
"50"	9.47
"5"	0.817

The appropriate half-life for the NBS ^{137}Cs brachytherapy working standards can only be decided by further open-air measurements. These should take place at intervals not greater than five or six years, in order that the uncertainty in the half-life not contribute more than about 0.1% to the combined uncertainty of calibration, as discussed in section 3.4. A copy of a typical calibration report of a ^{137}Cs source is given in appendix B.

3.3. Cobalt-60

3.3.1. Background information

The first calibrations of small ^{60}Co sources (in the early 1950's) were referenced to ^{226}Ra (encapsulated in 0.5 mm Pt-Ir) with the radium emission constant taken as 0.84 mR m^2/mg h. The calibrations were carried out using a gold-leaf electroscope for which the calibration factor was 0.7325 mR m^2/"mg Ra Eq" h. When the gamma-ray emission constant was changed [11] to 0.826 mR m^2/mg h, the constant for the electroscope was changed to 0.7203 mR m^2/"mg Ra Eq" h. Two sources measured using the electroscope are located in drawers A-1 and A-2. The data given on the safe labels (Room B145) for these sources, corrected for 4994 days decay, and the result of check measurements (DB 744:025) using the 1974 NBS standards are given in table 3-10.

Table 3-10. Calibration data for two cobalt-60 sources stored in safe in Room B145, in mR m^2/h.

Source drawer	Safe label data 1959 Apr 30	Safe label data corrected to 1972 Dec 31	Check data corrected to 1972 Dec 31
A-1	101.0	16.72	16.64
A-2	100.4	16.62	16.55

The agreement between the old calibration data for A-1 and A-2 and measurements of these sources using the 1974 standards is within 0.5%. This good agreement can be considered in part fortuitous since the original calibrations were referenced to radium and radium emission constants, whereas present ^{60}Co calibrations are based on standards, independent of radium, using physical data and corrections developed specifically for ^{60}Co in 1972 [9].

3.3.2. Present standards

Compared to ^{137}Cs, there are now few requests for ^{60}Co small-source calibrations. One reason perhaps is the relatively short half-life for ^{60}Co ($T_{1/2}$ = 5.27 y). The short half-life for ^{60}Co also poses the problem of maintaining standards with exposure rates in a range useful for small-source calibrations. For example, A-1 nd A-2 will have exposure rates of about 3 mR m^2/h in 1987.

New ^{60}Co sources were purchased in 1966 from Atomic Energy of Canada, Ltd. (AECL), and in 1976 from ICN Biomedicals, Inc. (ICN), and are available for use as standards for small-source calibrations using the replacement method. Only two of the seven sources purchased have been calibrated directly, using one of the standard graphite cavity ionization chambers in an open-air configuration. When and if it is deemed necessary, the remaining sources can be calibrated against these two sources using the replacement technique.

The standardized ^{60}Co sources were manufactured by ICN. They had nominal activities of 100 mCi (3.7 GBq) and 500 mCi (18.5 GBq) when purchased in 1976. The calibration data for these two standards in terms of exposure rate at one meter, corrected for air attenuation and room reflection, are given in the first four columns of Table 3-11.

Table 3-11. Exposure data for two ICN ^{60}Co sources. The graphite cavity ionization chamber identified as 50-1 [9] was used in an open-air configuration for standardization of the sources.

Source ICN	Measurement date	Reference	Exposure rate (mR m^2/h)	Time diff. to 1986 Jan 01 (days)	Exposure rate 1986 Jan 01 (mR m^2/h)
100	1978 Sep 29	DB 806:35	69.20	2651	26.35
100	1983 Aug 20	DB 851:24	36.46	865	26.41
100	1983 Dec 03	DB 851:38	35.10	760	26.40
500	1983 Aug 20	DB 851:24	194.7	865	141.0
500	1983 Dec 03	DB 851:38	188.2	760	141.6

In the 1986 adjustment to the NBS exposure standards (appendix A), the ^{60}Co exposure rate was reduced by 1.1%, of which 0.7% was due to a change in the stopping-power ratio, 0.1% to a change in the energy- absorption coefficient ratio, and 0.3% due to introduction of a humidity correction. The exposure rates of the 100-mCi and 500-mCi sources, corrected to 1986 Jan 01, using a half-life of 5.271 y, are given in the last column of table 3-11, and the mean exposure rates are given in table 3-12.

The standard deviation of the mean shown for the 100 source is from the data in table 3-11. The ICN 100 source is in safe drawer A-4, and the ICN 500 source is in safe drawer A-3.

Table 3-12. Mean exposure rate for the two ICN ^{60}Co sources, adjusted to the 1986 standard.

Source ICN	Mean exposure rate 1986 Jan 01 (mR m^2/h)
100	26.39 ± 0.1%
500	141.3

As shown in table 3-11, the ICN 100 source was measured on three occasions, with a time difference of about five years between the first and second measurements. In each case, the 50-1 graphite ionization chamber [9] and the open-air configuration were used for the measurements. The difference of about 0.2% between the first and second measurements is an indication of the good long-term reproducibility achievable with such measurements, where the standard chamber is the same but the set-up and essentially all of the other measurement equipment are different. While the two measurements of the 100-mCi source made four months apart were essentially identical, the two measurements of the 500-mCi source on the same dates differed by 0.4%, giving an indication of a limitation on the achievable accuracy.

A test of the consistency of the standard chamber measurements for these two sources using the replacement method showed a difference between the ratios of the open-air measurements for ICN 100 and ICN 500, and the replacement measurements, of about 0.1% (table 3-13). The difference between the ratios is in a direction to indicate that recombination corrections may be required for the replacement measurements, but measurements dedicated to resolve this question have not been conclusive. Future use of the ICN 500 ^{60}Co source will produce an ionization current in the 2.8-liter chamber of the order of magnitude of 35 pA or less. It is shown in table 3-13 that below this current there appears to be initial recombination only, and no recombination correction is required for relative current measurements, up to about 40 or 50 pA.

Table 3-13. Ratios of exposure data for ICN 100 and ICN 500 derived from open-air measurements with standard chamber 50-1, and from replacement measurements in Room B145.

Measurement condition	Exposure data ratios ICN 500/ICN 100	Reference
Standard chamber, open-air	5.354	Table 3-12
Replacement, B145	5.349	DB 851:30

3.4. Uncertainty assessment for ^{137}Cs and ^{60}Co sources

The method of uncertainty assessment used here follows the recommendation of the Comité International des Poids et Mesures (CIPM). The uncertainty estimates are of two kinds. Conventional statistical estimates of random uncertainties are given as standard deviations of the mean, and for convenience are designated as "Type A", which can be considered to be objective estimates. All other uncertainty estimates, designated "Type B", are subjective estimates, based on the extensive experience of the calibration staff. The Type B uncertainties are estimated so as to correspond approximately to a 67% confidence level, and they are assumed to have roughly the character of standard deviations. The estimates of each type are combined in quadrature, and then the two results are combined in quadrature to give a combined uncertainty, which is in turn multiplied by two to give an overall uncertainty. The overall uncertainty is considered to have the approximate significance of a 95% confidence limit.

Table 3-14 gives the details of the uncertainty estimate. The table has two parts, corresponding to the two kinds of measurements made during a brachytherapy calibration. Part (a) lists the component uncertainties when using the NBS primary standard graphite ionization chambers to determine the exposure rate of an NBS working standard source, referred to in the table as a secondary working standard source. Part (b) in table 3-14 lists the component uncertainties when measuring any source in the concrete calibration range described in section 3.1, using the 2.8-liter spherical ionization chamber described there.

For ^{137}Cs, the weaker NBS working standard sources have been compared with the strongest (table 3-9) and they are referred to in the table as tertiary working standard sources.

A user source is compared with either a secondary or a tertiary working standard. Comparison with a secondary working standard involves two measurements in the concrete calibration range, so the resultant uncertainty can be obtained by a combination in quadrature of the uncertainties listed in (a) with two times those listed in (b). Comparison with a tertiary working standard involves four measurements in the concrete calibration range, so the resultant uncertainty can be obtained by a combination in quadrature of the uncertainties listed in (a) with four times those listed in (b).

For a radioactive source, the uncertainty in the activity arising from uncertainty in the half-life can be evaluated by differentiating the equation representing exponential radioactive decay. The result can be presented in the form

$$dA/A = \ln 2 \, (t/T) \, (dT/T) \qquad (5)$$

where dA/A is the fractional uncertainty in the activity due to the fractional uncertainty in the half-life dT/T, during the elapsed time t/T multiples of the reference half-life T.

Table 3-14. Uncertainty analysis for ^{137}Cs and ^{60}Co source calibration by substitution.

	A (%)	B (%)
(a) Measurement of secondary working standard using primary graphite standard chambers.		
Volume	0.1	0.05
Charge	0.04	0.1
Timing	0.03	0.03
Air density	0.03	0.1
Recombination loss		0.07
Humidity*		0.1
Leakage and radiation background		0.02
Stopping-power ratio*		0.25
Energy-absorption coefficient ratio*		0.05
Wall absorption		0.1
Stem Scatter		0.02
Mean center of electron production		0.13
Effective measurement point*		0.05
Radial nonuniformity		0.01
Distance (50 cm)		0.1
Correction to vacuum		
Air attenuation		0.05
Room scatter		0.3
Source nonuniformity		0.2
Half-life		0.14
Long-term reproducibility		0.3
Quadratic sum	0.12	0.62
(b) Measurement of source using 2.8-liter spherical ionization chamber.		
Charge	0.05	0.1
Timing		0.03
Air density	0.05	0.05
Recombination loss		0.1
Leakage and radiation background		0.2
Distance		0.1
Difference in scatter		0.2
Source nonuniformity		0.2
Source size		0.1
Quadratic sum	0.07	0.40

	Comparison of user source with secondary standard	tertiary standard
Combined uncertainty	0.85	1.03
2 x combined uncertainty	1.70	2.06
Overall uncertainty (rounded)	2	2

Notes to Table 3-14

The uncertainty estimates are at the one-sigma level, and are in percent. The columns headed A and B refer to the estimates described in the text as Type A and Type B.

Charge includes uncertainties for both voltage and capacitance.

Air density includes uncertainties for both temperature and pressure.

Recombination loss refers to the uncertainty in correcting for loss of electrons by ion recombination.

Humidity refers to the uncertainty in correcting to dry air. The humidity can be assumed to be the same during the comparison of two sources.

Half-life refers to the primary standard source. From equation (5) and table 1-1, the uncertainty in the activity due to the uncertainty in the half-life is 0.015%/y for ^{137}Cs and 0.0012%/y for ^{60}Co. The value shown in the table is the mean of the three values calculated for table 3-8, for the time intervals shown to 1986 Jan 01. This value is used here for ^{60}Co also because it makes a negligible contribution to the final combined uncertainty, and using separate uncertainties for the two radionuclides would complicate the table.

Long-term reproducibility refers to the complete measurement system. From tables 3-8 and 3-11, the uncertainty is estimated to be the value shown.

Difference in scatter refers to the difference in the contribution of scattered radiation to the measured current, when comparing two sources.

*Data from Table 5.1 of reference [12].

All the entries in table 3-14 are uncertainties of multiplicative factors. While leakage and radiation background are subtractive corrections, their uncertainty estimates apply to the total current and are considered to be uncertainties of multiplicative factors.

For the entries in table 3-14, the Type A component is much smaller than the Type B component, so much so that even if the Type A component were neglected, the combined and overall uncertainties would not be significantly changed. This arises from the complexity of the interaction of ionizing radiation with matter: it is never possible to account fully for the numerous second-order effects, but it is usual during brachytherapy calibration at NBS to repeat measurements until the Type A component of the uncertainty is much smaller than the Type B component.

Based on the assessment of uncertainties described here, the value 2% is adopted as an estimate of the overall uncertainty in calibration of brachytherapy sources of ^{137}Cs and ^{60}Co by the substitution method. The overall uncertainty is considered to have the approximate significance of a 95% confidence limit.

4. The short-half-life radionuclides -- ^{192}Ir and ^{125}I

4.1. The reentrant chamber

A reentrant-type (well-type) ionization chamber, illustrated in figure 3, is employed in the calibration of small sources of these radionuclides. The chamber is an aluminum sphere with an internal volume of 3.44 liters and a 7.9-mm wall thickness. The collection electrode, which is a hollow cylinder surrounding the reentrant tube, is guarded and the high- voltage insulator is recessed to minimize electrostatic effects.

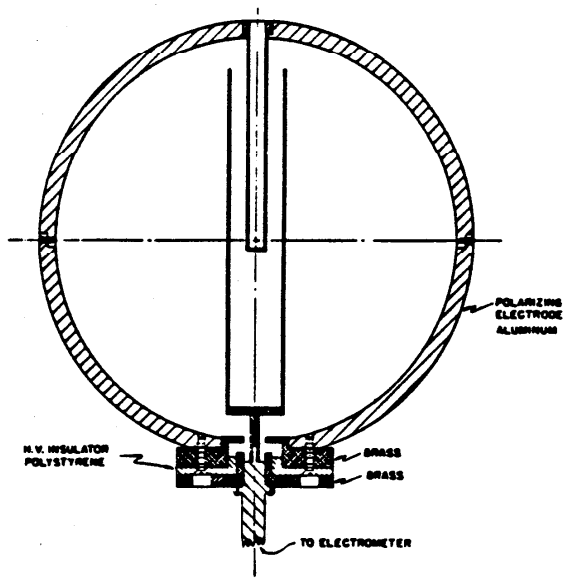

Figure 3. Aluminum reentrant ionization chamber used for measurement of ^{192}Ir and ^{125}I seeds. The outside diameter of the sphere is 203 mm. For ^{192}Ir, the tube coming down from the top is brass and carries a glass vial with the source at the bottom (section 4.2). For ^{125}I, the tube coming down from the top is aluminum and the seed rests on the bottom (section 4.3). The source position is close to the center of the sphere. From reference [13].

The ionization chamber is operated with a collection potential of 1100 V with positive ground. The aluminum sphere is at high potential and one must be aware, as is the case with all ionization chamber measurements, that a shock hazard is present. Introduction of a current-limiting resistor in series with the high voltage supply to reduce the shock hazard has the attendant problem of adding noise to the signal, and operation with the chamber wall at ground requires a triax-connector-type electrometer. In the triax type of operation, the electrometer isolation from ground must be capable of withstanding the high collection potential and the operator must be aware that certain of the electrometer terminals are "hot". This latter condition brings the hazard to the operator's milieu and can damage equipment not designed to withstand high potentials.

In contrast to the calibration of small sources of ^{60}Co and ^{137}Cs, where the reference for calibration resides in source standards, the reference for exposure standardization of ^{192}Ir and ^{125}I sources resides in the calibration factors for the reentrant chamber. It is important therefore to insure that the chamber characteristics have not changed over the course of time. Although the chamber design is such that no problem with constancy is foreseen, the chamber should be tested before use. To this end, a small ^{226}Ra source (identified as N-0.5, stored in safe drawer B-10) placed in a plastic tube has been used as a constancy check source since 1977. Starting in 1987, a somewhat larger ^{226}Ra source (identified as N-5, stored in safe drawer B-7) has also been used. A summary of the constancy check measurements using these two sources is given in table 4-1. There is no evidence in that table of a drift in the response of the chamber to the smaller radium source, and the reproducibility of the measurements has been very satisfactory. It was found that the readings were slightly different depending on which end of the source was up. Starting in October 1987 the two sources have been marked with a black marker on one end, and a record has been kept of the source orientation. The ratio of the currents with the black end up, to that with the black end down, was found to be 1.0015 and 1.0022 for N-0.5 and N-5, respectively. No distinction was made between the two ends in the data of table 4-1.

Table 4-1. Constancy check of aluminum reentrant ionization chamber for the years 1977 through 1987. The currents were normalized to STP (0°C and 101.325 kPa) and to 1987 Dec 31 using a radium half-life of 1600 y. σ is the standard deviation of a single measurement.

Source:	N-0.5			N-5		
Year	Number meas.	Mean current (pA)	σ (%)	Number meas.	Mean current (pA)	σ (%)
1977	5	34.52	0.3			
1978	9	34.57	0.2			
1979	3	34.52	0.2			
1980	2	34.60	0.0			
1981	4	34.51	0.1			
1982	1	34.54	---			
1983	5	34.56	0.1			
1984	8	34.54	0.2			
1985	19	34.54	0.1			
1986	23	34.57	0.2			
1987	66	34.56	0.2	34	298.1	0.1

4.2. Iridium-192

The reentrant tube for ^{192}Ir source calibrations [13] is made of brass. When the tube is screwed into the top of the chamber, the bottom of the tube is near the chamber center. A small hole in the side of the reentrant tube ensures that the ionization chamber is vented to the atmosphere.

Since the aluminum sphere is at high potential, it is necessary to use an insulating holder when putting ^{192}Ir sources into the brass reentrant tube. The holder is a glass vial 65 mm in length with an outer diameter of 9.2 mm and a wall thickness of 1.4 mm (0.29 g/cm^2). A thin plastic tube is used to insert the vial into the chamber. Although the attenuation of the relatively high-energy iridium radiation by the glass is not great, the presence of the glass is required during source standardization because the calibration factor for the reentrant chamber includes the effect of the glass vial.

Chamber calibration factors have been determined for two types of iridium sources using standardized seeds measured using a graphite ionization chamber [9], [13]. The sources are different in composition and internal dimensions but externally they are alike. The two types of encapsulations, platinum and stainless steel, can be distinguished by testing with a magnet. Details of the source dimensions and materials [13] are given in table 4-2.

Table 4-2. Dimensions and materials for two types of ^{192}Ir seeds.

Wall		
Material	Platinum	Stainless steel
Outside diameter	0.5 mm	0.5 mm
Thickness	0.1 mm	0.2 mm
Approximate length	3 mm	3 mm
Source		
Composition	Pt 90%, Ir 10%	Pt 70%, Ir 30%
Diameter	0.3 mm	0.1 mm

When an ^{192}Ir source is submitted for calibration, the type of encapsulation must be specified since the reentrant chamber calibration factors for the two types of seeds are different. The chamber calibration factors at standard temperature and pressure (STP: 0°C and 101.325 kPa) for the seed-type ^{192}Ir sources, in glass vials in the brass reentrant tube, are given in table 4-3. The NBS exposure standards revision on 1986 Jan 01 for ^{192}Ir consisted in the introduction of a 0.3% correction for humidity, and a 0.4% change in the stopping power ratio, giving a net conversion factor of 0.993.

Table 4-3. Reentrant chamber calibration factors at STP for ^{192}Ir seeds.

Source encapsulation	Before 1986 Jan 01 calibration factor (kR m^2/A s)	1986 Jan 01 calibration factor (kR m^2/A s)
Platinum	3.301	3.278
Stainless steel	3.209	3.187

The ionization currents produced by ^{192}Ir sources in the reentrant chamber must be corrected for recombination. Tests show that at a collection potential of 1100 volts, and ionization currents up to about 80 pA, the recombination correction is constant, 1.004. For ionization currents of about 900 pA, the recombination correction is estimated to be 1.006. In the region 80 to 900 pA, linear interpolation is used to estimate the recombination correction for intermediate currents.

The calibration factors determined in Table 4-3 used a 74.0-day half-life [13]. The elapsed times, between the calibration of the various arrays of seed and the calibration of the aluminum reentrant chamber with individual seeds, ranged from about 2.6 to 3.1 half lives for the platinum-encapsulated seed, and was about 0.12 half-lives for the stainless-steel-encapsulated seeds. The recalculation of all the data using the currently accepted half life of 73.83 days [table 1-1] is not practical. The magnitude of the change can be estimated from equation (5), taking

$$dT = 74.00 - 73.83 = 0.17 \text{ days.}$$

We find that the shorter half-life would reduce the expected current by about 0.45% for the platinum-encapsulated seeds, and by a negligible 0.02% for the stainless-steel-encapsulated seeds. The uncertainty of the half-life is given in reference [5] as 0.18 days, at the 1-sigma level, which leads to an uncertainty of about 0.5% for the platinum-encapsulated seeds, and this value is used in table 4-7. Uncertainty in the decay correction of a source being calibrated due to a calibration time of a few weeks, is negligible.

While in principle there should be an increase of 0.4 to 0.5% in the exposure rate of platinum-encapsulated sources, consideration of the small size of this change relative to the overall uncertainty of the calibration, and of the inconvenience to the user community resulting from the change, appears to justify not applying the correction at this time. This correction is due to the time that elapsed between calibration of the seed arrays with the primary standard chambers and calibration of the reentrant chamber with the seeds. It is clear in retrospect that this component of the uncertainty could have been greatly reduced by performing the work so that the intervals between these different kinds of measurements were kept much smaller than one half-life.

Typical data resulting from an ^{192}Ir source calibration are summarized in table 4-4.

Table 4-4. Data from calibration of a stainless-steel-clad ^{192}Ir source. The data are from DB 806:48-49.

Date	Time of day	Number of meas.	Mean current at STP (pA)	Std. dev. of the mean (%)	Mean current at STP 1979 May 14.5 (pA)
1979 May 14	0950	6	31.167	0.02	31.14
1979 May 15	1425	7	30.956	0.02	31.28

The mean of the decay-corrected currents is 31.21 pA (using the half-life 73.83 days). The reentrant ionization chamber calibration factor for the stainless-steel-clad ^{192}Ir sources is 3.209 kR m^2/A s, and since the ionization current is less than 80 pA, the recombination correction is 1.004. The exposure rate at one meter for this source corrected for scattering and air attenuation is therefore

$$\dot{X}D^2 = 100.6 \text{ nR m}^2/\text{s on 1979 May 14.5} \qquad (6)$$

The manufacturer of this ^{192}Ir source stated to the customer that the activity per seed (in a batch of 168 seeds) was 1.217 mCi on 1979 March 26, and that they used a conversion factor of 4.6 R cm^2/mCi h (128 nR m^2/mCi s) to compute exposure data. If one corrects the manufacturer's data to 1979 May 14.5 (49 days, assuming March 26.5) the exposure rate at unit distance is 98.3 nR m^2/s which agrees with the calibration value to about 2%. A copy of a typical ^{197}Ir calibration report is given in appendix C.

4.3. Iodine-125

The reentrant ionization chamber designed for exposure calibrations of ^{192}Ir seeds is also used for measurements of ^{125}I seeds. However, the brass reentrant tube could not be used for the ^{125}I measurements because of attenuation in the brass of the low-energy (<35.5 keV) radiation. With the brass tube, the chamber sensitivity is only about 4 fA per "apparent"[4] mCi of ^{125}I. To put this sensitivity into perspective, the background current is about 20 fA.

With a reentrant tube fabricated of aluminum with walls 0.64 mm thick, the chamber sensitivity is increased, for ^{125}I, by a factor of about 2400. The dimensions of the aluminum tube are such that an ^{125}I seed, dropped into the tube, assumes a horizontal position at the bottom of the tube, and is centered vertically in the spherical chamber. The inside diameter of the tube is 5 mm so a seed of length 4.5 mm is constrained to lie near the center of the tube.

While the brass reentrant tube screws into the top of the chamber, the aluminum tube is designed to be easily placed into, and removed from, the chamber. This feature is necessary because of anisotropy of the radiation from the ^{125}I seeds, requiring removal and replacement of the tube many times in order to randomize the seed orientation in the tube. The calibration factors for the chamber for the three types of ^{125}I seeds [14] are the quotients of the exposure rates at unit distance, normal to the plane of randomized, uniform, arrays of seeds of one type, and the sum of the ionization currents produced individually in the chamber by each seed of an array. Details regarding the seed type and the chamber calibration factors are given in table 4-5. The NBS exposure standards revision on 1986 Jan 01 for ^{125}I introduced a 0.2% correction for humidity giving a conversion factor of 0.998.

---

[4]The 3M Company defines "apparent activity in millicuries" as descriptive of output activity only and not the total quantity of ^{125}I contained within the titanium capsule of the seed.

Table 4-5. ^{125}I seed types and their associated reentrant ionization-chamber calibration factors.

3-M Co. Model No.	Type	Details*	Calibration factors Before 1986 (kR m^2/A s)	1986 Jan 01 (kR m^2/A s)
6701	Gold-marker	^{125}I adsorbed on two resin balls with one gold ball for seed location by radiography.	3.857	3.849
6702	No-marker	^{125}I adsorbed on three resin balls. These seeds can have the highest activity.	3.708	3.701
6711	Silver-wire	^{125}I adsorbed on silver wire. Silver characteristic x rays are emitted.	4.433	4.424

*The active materials are sealed in titanium seeds 4.5-mm long and 0.8-mm outside diameter.

The calibration factor for the chamber does not include a saturation correction for measurements of a source. A factor of 1.000 for 0.8 pA and 1.004 for 100 pA is given in reference [14], which would indicate the presence of volume recombination, which is rate dependent. Fourteen sets of measurements, taken over a period of several years (referenced in DB 851:111), involving chamber currents from 8 pA to 530 pA, indicate that rate-independent initial recombination generally predominates, with a contribution from rate-dependent volume recombination. Least squares analysis of the data (excluding outliers) gives the correction factor for lack of saturation as

$$k_{sat} = 1.005 + 5 \times 10^{-6}\ I \quad ,$$

where I is the measured current in picoamperes.

Repeated determinations of the recombination correction do not reproduce well, showing fluctuations up to 1.5% percent; correction factors greater than 1% were considered outliers. The data are analyzed in the conventional manner by plotting the reciprocal of the collected current against the reciprocal of the polarizing potential, and in some cases these plots show a curvature that is opposite to that predicted by the usual equations that represent initial and volume recombination. The reason for this behavior is not known, but it is speculated that it is related to the inhomogeneities of the electric field, and the strong gradient in the radiation field near the source.

The decay correction used in determining the calibration factors in table 4-5 are based on a measured half-life, since the half-life used initially (60.14 ± 0.11 d) was found to be too long. Five seeds were measured 145 days apart, giving a half-life of 58.9 d ± 0.2%. The long-term stability of the measurement system was found by 10 radium check-source measurements to be 0.3%, and the two combine to give a random uncertainty of 0.36% [14]. Then the fractional uncertainty in the <u>measured</u> half-life is dT/T = 0.0036.

Due to experimental difficulties, long periods of time elapsed between the initial free-air-chamber and reentrant-chamber measurements for some of the ^{125}I seeds. However, for the most part, the FAC-reentrant chamber measurement interval was short. The worst cases are for the first series of gold- and silver-marker-type seeds where the interval between measurements was about 2.5 and 1.3 half-lives, respectively.

The interval between measurements for the first series of no-marker seeds was about 0.22 half-lives. The interval between measurements with the free-air chamber and the reentrant chamber for each seed type in the second series was essentially zero. In summary, using equation (5), the uncertainty in the calibration factors of table 4-5, due to uncertainty in the measured half-life, is

	First Series	Second Series	Average
Gold-marker	0.6%	0.01%	0.3%
Silver-wire	0.3%	0.02%	0.2%
No-marker	0.05%	0.01%	0.03%

The above averages are the values used in table 4-8 as the uncertainty component due to the half-life.

Although the currently accepted half-life is 59.6 ± 0.2 d (table 1-1), we continue to use the calibration factors for the reentrant chamber that were derived from data corrected using the measured half-life (58.9 d). Use of the accepted half-life would have caused greater disagreement in the observed measurement with time. With regard to the calibration of an ^{125}I seed where the period of calibration is two weeks or less, the difference in calibration data depending on the choice of half-lives is less than 0.2%, which is insignificant in comparison to the overall uncertainties given in table 4-8.

Correction to vacuum was made for attenuation in the air path between the measurement plane of the free-air chamber (FAC) and the central plane of the collecting electrode, and for air attenuation in the distance from the source arrays to the FAC measurement plane. The air path inside the FAC was 12.75 cm, and the source arrays were measured at the following distances from the FAC measurement plane:

Gold-marker: 75% at 25 cm, and 25% at 50 cm
Other seeds: all at 25 cm.

The measurements were made using a 3-mm hole in a lead sheet, at a fixed distance from the array. This produced a narrow beam that did not touch the entrance or exit apertures of the FAC. The ion current in the FAC was measured, varying the distance from the array to the measurement plane of the FAC from about 30 to 50 cm. The measurements were analyzed assuming exponential absorption, giving an apparent attenuation coefficient of 1.5×10^{-3} cm^{-1} for air at room conditions [14]. This number is significantly larger than that obtained by calculation using the ^{125}I spectrum, which gives 0.4×10^{-3} cm^{-1}. Review of the attenuation data by consultants in statistical engineering, as part of the preparation of this document, gave a value of $(1.75 \pm 0.74) \times 10^{-3}$ cm^{-1}.

For the purpose of calculating the uncertainties in the attenuation corrections, the value $(1.5 \pm 0.7) \times 10^{-3}$ cm^{-1} is adopted. Because of the assumption of exponential attenuation, the fractional uncertainty in the air attenuation correction factor is just the uncertainty in the attenuation coefficient times the length of the air path. For the path length of 12.75 cm, this gives an uncertainty of 0.9% for the air attenuation inside the FAC, which applies to all the measurements. For distances of the source array from the measurement plane of the FAC of 25 and 50 cm, the uncertainties are 1.8 and 3.5%, respectively, which in turn lead to uncertainties of 2.2% for the air attenuation correction (outside the FAC) for the gold-marker seeds, and 1.8% for the other seeds. These numbers are used in table 4-8.

There is a possibility of significant error in the calculation of tissue dose based on the NBS exposure calibration of ^{125}I seeds. This is due to the presence of the 5-keV x-ray lines originating in the titanium cladding of the seeds [15] [16]. These lines contributed to the measurements in the free-air chamber, but are essentially all absorbed at the surface of the seeds when implanted in tissue. The error in tissue dose when only the ^{125}I spectrum is assumed has been estimated to be as large as 10%. Further theoretical and/or experimental study is required to resolve this question, and to determine whether a change is necessary in the calibration factor of the reentrant chamber. The effect of the titanium K lines is not included in the uncertainty analysis of table 4-8.

4.3.1. Working procedures for ^{125}I calibration

Before it is opened, the source container should be placed in the mandatory white plastic tray (section 5). The bottle cap should be unscrewed with the bottle in the lead container, and, with the bottle still in the lead container, the contents dumped into the tray. The aluminum tube, supported vertically in the tray, is loaded with a seed using appropriate handling tongs. The tongs should be inspected after use to insure that the seed has dropped into the tube, and the presence of the seed in the tube can be verified by rattling it around. This can be done after loading the seed using as a handle the short bakelite rod that is threaded into the plastic at the top of the tube. With the ^{125}I seed loaded in the aluminum reentrant tube, the calibration procedure is as follows:

1. In anticipation of the calibration, the required measurement equipment should have been turned on to warm up for two hours, when using a Keithley Model 616 Electrometer. The Keithley Model 642 Electrometer, which may also be used, is capable of measuring very small currents but requires up to 24 hours to be within specifications (offset current 1×10^{-17} A) if the instrument has recently been turned on, overloaded, or subjected to transient pulses. This extremely low current measurement capability is not usually of interest in brachytherapy source calibrations.

2. With the high-voltage supply turned off, the high-voltage connection to the reentrant chamber should be checked. It is good practice to turn the screw that acts as the connector to the chamber wall and to rotate the clip connecting the high-voltage wire to the screw. Experience has shown that if these connections remain static over long periods of time, the aluminum oxidizes and develops a high resistance in the connections. As a result, noise is observed in the measurements. The effect of this type of noise on typical measurements is shown in table 4-6.

Table 4-6. Effect of noise pick-up in high-voltage connection to aluminum reentrant chamber.

Condition	Mean ionization current (pA)	Number of meas.	Standard deviation (pA)	Standard deviation of the mean (%)
Noise	115.15	10	1.09	0.3
No Noise	113.64	4	0.02	0.01

3. If the brass tube is not already installed, screw it into the chamber finger-tight.

4. Check that the electrometer feedback shorting switch is in the shorting position. Set the high-voltage polarity switch to negative and turn on the high-voltage switch. Set the high voltage to 1100 volts.

5. Measure the background leakage current for the measurement system. Unless new sources of radiation are introduced into the environment of Room B145, and if the important insulators are clean and dry, the background leakage current should not exceed 2.5×10^{-14} A.

6. Using an appropriate handling device, remove the ^{226}Ra source (N-5 or N-0.5) from the safe drawer (B-7 or B-10, respectively) and place it into the No. 1 thistle tube (the tube is capped at the bottom). Turn the plastic thistle tube on its side and shake the source down the tube to determine whether the blackened end of the source will be up or down when placed into the reentrant chamber. Record the result. (The radium source may sometimes flip and reverse ends when dropped into the thistle tube from the top.)

7. Handling the thistle tube with forceps, carry the tube with the radium source behind the concrete barrier wall to the reentrant chamber and insert it into the brass tube. Remember that the chamber is at high voltage.

8. Measure the ionization current produced by the radium source in the reentrant chamber. If the measurement system and chamber have retained their integrity, the results of the measurements should be in accord with the data in table 4-1. Ordinarily, four or five measurements are all that are required to evaluate the condition of the measurement system. A 60-s charge integration time for the N-0.5 radium source produces a feedback potential of about 1.8 V, and for the N-5 source a 70-s time gives about 18 V, when the capacitance of the electrometer is 1 nF. The range of the digital voltmeter used for electrometer feedback-voltage measurements should be set to maximize the number of read-out digits. For the Digitec Model 267 DC digital voltmeter, the 2-V range is selected when the aforementioned integration time and capacitance are used for the N-0.5, and the 20-V range for the N-5 source.

9. With the electrometer feedback shorted, turn off the high voltage switch and return the source to its drawer in the safe. The source is unloaded from the thistle tube by letting it slide out into the white plastic tray.

10. Check that the high voltage is off, then remove the brass tube from the chamber. The aluminum tube containing the ^{125}I seed can now be placed into the chamber taking care to insert it vertically to avoid striking the cup-like collection electrode.

11. Turn on the high voltage. When the high voltage reaches a steady condition, ionization current measurements can proceed. Normally, the reproducibility of the measurements for an undisturbed ^{125}I seed is such that no more than two or three measurements are required per seed position. If the measurements are of good quality, check that the electrometer is shorted and turn off the high voltage. Wait for the high voltage to decay to near zero. Remove the aluminum tube from the chamber using the bakelite handling rod. Turn the tube upside down and shake the tube to change the seed orientation. This operation is, of course, done quickly to minimize radiation exposure. Carefully reinsert the tube into the chamber. Turn on the chamber high voltage and when it reaches a steady state, repeat the measurement procedure. This procedure is repeated until the standard deviation of the mean of the ionization currents for the randomized seed orientations is <0.4%, but should include at least 10 independent procedures because sometimes the measurements show an abnormal distribution.

4.4. Information to be recorded in reentrant-chamber calibrations

The calibration of small sources has been performed manually using a programmable calculator, since the number of calibrations has been small, and the available computer-DAS systems have generally been occupied with instrument calibrations. There are many advantages to using computer-DAS equipment, e.g., automatic measurement of feedback voltages, temperature and pressure transducer voltages, time of day, time interval, control of shorting switches, calculation of ionization currents, calculation of temperature and pressure corrections, corrections for source decay, and automatic recording of data. At the time of writing (December 1987) a new computer-DAS system has been acquired and it will be used for brachytherapy source calibrations.

The information that must be recorded in the course of reentrant-chamber calibration is not only measurement data but all information relating to the source. The manufacturer will usually provide an estimate of the activity and the date. In the case of ^{125}I seeds, the information is taken from the label on the lead container. In a calibration in September 1984, this information was as follows:

Product	^{125}I Seed
Model	6711
Lot No.	151
Dosage	19.5 mCi
By	RF
Date	8-20-84

Important information always to be recorded is as follows:

1. Person performing calibration.

2. Date.

3. Equipment (Indicate if same, or different from, equipment used previously).

4. Capacitance (Identify, reference calibration).

5. HV and polarity of ionization chamber collection potential.

The data to be recorded are the same for manual or computer-DAS systems, although the equipment and recording methods are quite different. While the summary presented here is based on experience with the manual system, the data to be recorded are as follows, for any system of data acquisition:

1. Time of day for each measurement.

2. Background and leakage data in the form: integration time (Δt), feedback potential (V_0) at the start of the integration period, feedback potential (V_f) at the end of the integration period, temperature, pressure.

3. Several computations of background drift rate, $(V_f - V_0)/\Delta t$, with record of mean value used in the computation.

4. Upon introduction of the source into the reentrant chamber, integration time (Δt) used in exposure measurement.

5. Time of day for each measurement.

6. V_0 and V_f (indicate sign).

7. Temperature and pressure.

8. Net ionization current for each measurement corrected to STP.

9. The mean net STP-corrected ionization current with the standard deviation of the mean in percent.

10. Record that the high voltage has been turned <u>off</u>.

11. Record that the source has been moved.

12. Record that the high voltage has been turned <u>on</u>.

13. Repeat steps 5 through 12 until the percent standard deviation of the mean for the net ionization currents (at reference temperature and pressure) is $<0.4\%$ (if necessary, correct for decay). For ^{125}I seeds, this repetition should be carried out at least 10 times, to obtain the randomized-seed-position net ionization current.

14. Apply the appropriate recombination correction to the computed ionization current.

15. Multiply the mean corrected ionization current by the appropriate reentrant chamber calibration factor to determine the exposure (or air kerma) rate at one meter (in vacuo) from the seed.

16. Correct the manufacturer's activity value to the reference date for the calibration and compute the exposure rate from the activity and the rate constant stated by the manufacturer. This should agree with the measured exposure or kerma rate within several percent, and serves to check both the NBS calibration and the manufacturer's measurements. If the manufacturer does not specify a rate constant, use a value from table 1-2, which will serve as a rough check to detect a major discrepancy.

It is good practice to repeat calibrations of brachytherapy sources on one or more days. For ^{60}Co, ^{137}Cs, and ^{192}Ir, an overall mean value with appropriate statistics can usually be reported with good confidence. However, ^{125}I measurements are not as reproducible as measurements of other sources. It is necessary, therefore, to report individual mean values of the measurements at different times in order to describe adequately the character of the ^{125}I seed during calibration. Reasons suggested for the anomalous behavior of ^{125}I seeds are: mobility of the resin balls or silver wires, migration of activity in or out of the carriers, and short half-life contamination.

A copy of a typical calibration report for an ^{125}I seed is given in appendix D. The text of each calibration report is modified as required for other seed types.

4.5. Uncertainty assessment for ^{192}Ir and ^{125}I

Uncertainties of brachytherapy sources calibrated by use of a reentrant chamber are evaluated in several steps. First the uncertainty of the exposure rate of the array of sources is estimated, next the uncertainty in the use of the array of sources to standardize the reentrant chamber is estimated, then the uncertainty in the measurement of a single source in the reentrant chamber is estimated, and finally the uncertainties are combined to obtain the final estimate. The general method of uncertainty assessment, leading to an estimated overall uncertainty, is described in section 3.4.

Tables 4-7 and 4-8 give the details of the uncertainty estimates. As in table 3-14, all the entries in tables 4-7 and 4-8 are considered to be estimates of uncertainties of multiplicative factors.

The overall uncertainty for ^{192}Ir comes predominantly from the Type B components, as is the case with ^{137}Cs and ^{60}Co brachytherapy calibrations. There are two kinds of ^{192}Ir sources, but no distinction is made between them in the uncertainty estimate in table 4-7 except for the half-life (decay correction) entry. On the other hand, the ^{125}I seeds are much less reproducible, as noted above. As a result, the three kinds of ^{125}I seeds show appreciably different overall uncertainties.

Table 4-7. Uncertainty analysis for ^{192}Ir source calibration with the reentrant chamber.

	A (%)	B (%)
Measurement of array of seeds using graphite standard chambers		
Volume	0.01	
Charge	0.03	0.05
Timing		0.01
Air density	0.03	0.05
Recombination loss		0.03
Humidity		0.1
Leakage and radiation background		0.02
Stopping power ratio		0.25
Energy absorption coefficient ratio		0.2
Stem scatter		0.02
Wall absorption		0.1
Mean center of electron production		0.02
Effective measurement point		0.05
Radial nonuniformity		0.01
Distance	0.04	
Correction to vacuum		
Air attenuation		0.1
Room scatter		0.3
Half-life		
Platinum encapsulated (2.82 half-lives)		0.5
Stainless steel encapsulated (0.12 half-lives)		0.02
Array cover attenuation		0.1
Reproducibility in exposure measurement	0.2	
Quadratic sum for graphite chamber measurement		
Platinum encapsulated seeds	0.21	0.70
Stainless steel encapsulated seeds	0.21	0.49
Calibration of aluminum reentrant chamber using individual seeds of the array		
Charge	0.03	0.05
Timing		0.01
Air density	0.05	0.05
Recombination loss		0.1
Humidity		0.1
Leakage and radiation background		0.02
Reproducibility in reentrant chamber	0.1	
Quadratic sum for reentrant chamber calibration	0.12	0.16

Table 4-7. Continued

	A (%)	B (%)
Measurement of single unknown source in reentrant chamber		
Charge	0.05	0.1
Timing		0.01
Air density	0.05	0.1
Recombination loss		0.1
Leakage and radiation background		0.02
Reproducibility in reentrant chamber	0.1	
Plastic cover		0.3
Quadratic sum for unknown measurement	0.12	0.35

	Platinum	Stainless steel
Combined uncertainty	0.84	0.68
2 x combined uncertainty	1.7	1.4
Overall uncertainty	2	

Notes to table 4-7.

The uncertainty estimates are at the one-sigma level, and are in percent. The columns headed A and B refer to the uncertainty estimates described in the text as Type A and Type B.
Charge includes uncertainties for both voltage and capacitance.

Air density includes uncertainty for both temperature and pressure.

Half-life refers to the uncertainty in the decay correction during the interval between the measurement with the standard chamber and with the reentrant chamber. The uncertainty in the currently accepted half-life was used, for the intervals shown in the table. No uncertainty estimate is included for the difference between the currently accepted half life (73.83 d) and the value actually used (74.0 d).

Plastic cover refers to the uncertainty introduced by the thin plastic ribbon or tubing in which the seeds are furnished. Although we request that the tubing beyond the ends of the seed be cut away, some material must be left to avoid damaging the seed. This extra length causes the seeds to lie at slightly different levels in the rounded bottom of the glass vial. The error estimate is for the attenuation in the tubing and the change in the chamber response due to the different seed positions.

Overall uncertainty is rounded upward to an integral value.

Table 4-8. Uncertainty analysis for ^{125}I source calibration with the reentrant chamber.

	Au-mark		Ag-wire		No-mark	
	A (%)	B (%)	A (%)	B (%)	A (%)	B (%)
Source array						
Exposure rate	0.07	0.33	0.07	0.33	0.07	0.33
Leakage		0.4		0.2		0.2
Air attenuation FAC		0.9		0.9		0.9
Reproducibility of measurements	0.6		0.8		0.3	
Distance		0.2		0.2		0.2
Correction to vacuum		2.2		1.8		1.8
Half-life		0.3		0.2		0.03
Quadratic sum	0.60	2.46	0.80	2.07	0.31	2.06
Calibration of reentrant chamber						
Charge	0.03	0.05	0.03	0.05	0.03	0.05
Timing		0.01		0.01		0.01
Air density	0.05	0.05	0.05	0.05	0.05	0.05
Recombination loss		0.4		0.4		0.4
Humidity		0.1		0.1		0.1
Leakage and radiation background		0.02		0.02		0.02
Reproducibility in reentrant chamber	2.2		1.4		0.4	
Quadratic sum	2.20	0.42	1.40	0.42	0.40	0.42
Calibration of unknown source						
Charge	0.03	0.1	0.03	0.1	0.03	0.1
Timing		0.01		0.01		0.01
Air density	0.05	0.1	0.05	0.1	0.05	0.1
Recombination loss		0.4		0.4		0.4
Humidity		0.1		0.1		0.1
Leakage and radiation background		0.02		0.02		0.02
Reproducibility in reentrant chamber	0.4		0.4		0.4	
Quadratic sum	0.40	0.44	0.40	0.44	0.40	0.44
Total quadratic sum	2.32	2.53	1.66	2.16	0.65	2.15
Combined uncertainty	3.43		2.72		2.25	
2 × combined uncertainty	6.86		5.44		4.50	
Overall uncertainty	7		6		5	

Notes to Table 4-8.

The uncertainty estimates are at the one-sigma level, and are in percent. The columns headed A and B refer to the estimates described in the text as Type A and Type B.

The columns headed Au-mark, Ag-wire, and No-mark refer to the gold-marker, silver-wire, and no-marker seeds, respectively.

Exposure rate is from table 5.1 of reference [12] except for the added leakage, air attenuation for free air chamber, and reproducibility of measurements. The gold-marker seeds were measured at distances of 50 cm and 25 cm while the other two types of seeds were all measured 25 cm. The 50-cm data have leakage corrections which are larger than 10%, while the 25-cm data have corrections less than 4% and often less than 2%. However part of the leakage error is assumed to be embedded in the reproducibility error. The leakage error is taken as 1% for the 50-cm measurements and 0.2% for the 25-cm measurements (the 50-cm data contributes 25% to the mean value).

Air attenuation FAC refers to the correction for attenuation in the 12.75-cm air path within the free-air chamber, as described in section 4.3.

Reproducibility of measurements estimates are from reference [14].

Correction to vacuum refers to the corrections for air attenuation in the air path between the source array and the free-air chamber, outside the FAC, as described in section 4.3.

Half-life refers to the uncertainty in the calibration factor due to the uncertainty in the measured half-life, as described in section 4.3. Uncertainty in the calibration of the user's source due to uncertainty in the half-life, resulting from about two-weeks calibration time, is considered negligible.

Charge includes uncertainties for both voltage and capacitance.

Air density includes uncertainties for both temperature and pressure.

Overall uncertainty is rounded upward to an integral value.

Based on the assessment of uncertainties described here, the following are adopted as the overall uncertainties for sources calibrated with the reentrant ionization chamber:

^{192}Ir	2%
^{125}I, no-marker	5%
^{125}I, silver-wire	6%
^{125}I, gold-marker	7%

The overall uncertainty is considered to have the approximate significance of a 95% confidence limit.

5. Safety considerations

The main considerations are radiation safety and high-voltage safety.

5.1. Radiation safety

Handling brachytherapy sources is probably the most hazardous calibration activity performed by the Dosimetry Group. The small number of sources calibrated per year makes automation of source handling uneconomic. The sources are moved from their shipping containers (generally called "pigs") to small lead transfer pots, and then to their measurement positions, by means of long-handled tongs or tweezers. These devices must not be too inconvenient, as would result from very long handles, since calculation and experience show that the dose to the operators's hands is minimized by rapid handling.

The handling of any physically small source such as a seed of ^{192}Ir or ^{125}I requires special care. The seeds are small, the color of their encapsulation material is not easily distinguishable from the color of working surfaces, and the handling tools available can drop or accidentally propel a seed away from the handling area. Moreover, if a seed is dropped behind the concrete barrier in the vicinity of the source storage safe, the background radiation from the safe makes it difficult to locate the source by means of a radiation detector. It is mandatory therefore that all seed-type sources be handled only over a white tray with sides several inches high. This is good practice for other types of sources as well.

Manipulation of brachytherapy sources should whenever possible be carried out behind lead L-shields with lead-glass windows. These shields protect the body and (to some extent) the face of the individual, while the hands are free to reach behind the shield as necessary to carry out the manipulations. The work should be performed in suitable trays, in case a source is dropped. If a source is dropped on the floor and its position is not immediately evident, the room should be secured with suitable signs and the Health Physics Group called in to locate the source with portable detectors.

Reading engraved identification marks is often difficult. It should be done with the source behind a lead or concrete shield, using either a telescope or a TV camera.

Radiation badges must be worn at all times while working with brachytherapy sources. In particular, finger badges must be worn when the sources are being manipulated in any manner. The rate constants listed in table 1-2 can be used to estimate exposures to the hands and body and to judge safe handling times. Because the most critical exposures are to the hand at distances of a few centimeters, and the activity of brachytherapy sources can be given in units of millicuries or megabecquerels, it is convenient to convert the rate constants in table 1-2 to the values given in table 5-1.

Table 5-1. Rate constants in units convenient for protection calculations.

Radionuclide	Exposure rate constant (R cm^2/mCi h)	Air-kerma rate constant (mGy cm^2/MBq h)
^{60}Co	13.1	3.1
^{137}Cs	3.3	0.8
^{192}Ir	4.0	1.0
^{125}I	1.3	0.3
Radium	8.25	2.0

5.2 High-voltage safety

Most of the ionization chambers used in brachytherapy calibration, and in standardizing NBS brachytherapy sources, have high voltage on their outside electrodes. The convenience of this arrangement is considered to outweigh the hazard involved. Attentiveness to safe working procedures is dictated when working around ionization chambers that have exposed high-voltage electrodes. In any event, brachytherapy calibrations are performed only by a few highly experienced members of the Dosimetry Group.

References

[1] NBS, NBS Calibration Services Users Guide 1986-88. NBS Special Publication 250, G. A. Uriano, et al., Editors, U.S. Department of Commerce, National Bureau of Standards, U. S. Government Printing Office, Washington, D. C. July 1986.

[2] Boutillon, M., and Perroche-Roux, A. M., Re-evaluation of the W value for electrons in dry air. Phys. Med. Biol. 32, 213-219 (1987).

[3] Boutillon, M., $\bar{g}$-values from Berger and Seltzer tables (1982). Report CCEMRI(I)/85-18 to Section I of CCEMRI (Consultative Committee for Standards for the Measurement of Ionizing Radiation), BIPM (International Bureau of Weights and Measures), Pavillon de Breteuil, F-92310 Sevres, France (1985).

[4] AAPM, Specification of brachytherapy source strength. AAPM Report No. 21, American Association of Physicists in Medicine, American Institute of Physics, New York, 1987.

[5] NCRP, A handbook of radioactivity measurements procedures. NCRP Report 58, 2nd edit., National Council on Radiation Protection and Measurements, Bethesda, 1985.

[6] NCRP, Specification of Gamma-Ray Brachytherapy Sources. NCRP Report No. 41, National Council on Radiation Protection and Measurements, Washington, D.C. 1974.

[7] Loftus, T. P., Standardization of cesium-137 gamma-ray sources in terms of exposure units (roentgens). J. Res. Nat. Bur. Stand. (U.S.) 74A, 1-6 (1970).

[8] Hubbell, J. H., Photon cross sections, attenuation coefficients, and energy absorption coefficients from 10 keV to 100 GeV. Nat. Stand. Ref. Data Ser. 29, Nat. Bur. Stand. (U.S.), 85 pages (August 1969).

[9] Loftus, T. P., and Weaver, J. T., Standardization of ^{60}Co and ^{137}Cs gamma-ray beams in terms of exposure. J. Res. Nat. Bur. Stand. (U.S.) 78A, 465-476 (1974).

[10] Gorbics, S. G., Kunz, W. E., and Nash, A. E., New values for the half-lives of cesium-137 and cobalt-60 nuclides. Nucleonics 21, No. 1, 63-65 (1963).

[11] Attix, F. H., and Ritz, V. H., A determination of the gamma-ray emission of radium. J. Res. Nat. Bur. Stand. (U.S.) 59, 293-305 (1957).

[12] Lamperti, P. J., Loftus, T. P., and Loevinger, R., Calibration of x-ray and gamma-ray measuring instruments at the National Bureau of Standards. National Bureau of Standards Special Publication 250-16 (1987).

[13] Loftus, T. P., Standardization of iridium-192 gamma-ray sources in terms of exposure. J. Res. Nat. Bur. Stand. (U.S.) 85, 19-25 (1980).

[14] Loftus, T. P., Exposure standardization of iodine-125 seeds used for brachytherapy. J. Res. Nat. Bur. Stand. (U.S.) 89, 295-303 (1984).

[15] Kubo, H., Exposure contribution from Ti K x rays produced in the titanium capsule of the clinical I-125 seed. Med. Phys. 12, 215-220 (1985).

[16] Williamson, J. F., Monte Carlo evaluation of specific dose constants in water for ^{125}I seeds. Med. Phys., in press.

APPENDIX A

Attachment concerning adjustment of NBS exposure rates.

Exposure rates were adjusted at NBS on 1986 Jan 01 to take into account recent refinements in some of the physical parameters. Exposure rates in all reports issued after 1986 Jan 01 are lower than the exposure rates in reports issued before that date. The changes in percent are as follows:

NBS primary standard:	Cavity Chambers			Free-air chambers
Radiation:	^{60}Co	^{137}Cs	^{192}Ir	^{125}I and x-rays
Humidity	-0.3	-0.3	-0.3	-0.2
Energy-absorption coefficient ratio	-0.1	0.0	0.0	N.A.
Stopping-power ratio	-0.7	-0.5	-0.4	N.A.
Total change	-1.1	-0.8	-0.7	-0.2

Laboratories with instruments calibrated prior to 1986 Jan 01 can bring their instruments into agreement with the new exposure rates by reducing the earlier calibration factors by the above total changes in percent.

Humidity. Before 1986 no correction was made for the effect of water vapor in the ambient air, since early NBS work had indicated a negligible effect. More recent work at several national laboratories has determined this effect with good accuracy. The values used are taken from ICRU Report 31, page 31, Figure 5.14. These factors are applied to the exposure rate determined by the NBS primary standard. No correction is made for the effect of water vapor on the reentrant chamber, since it is assumed that both the calibration of the chamber with the standard seeds and the calibration of unknown source take place in air with a relative humidity between 10% and 70%.

Energy-absorption coefficient ratio. The most recent values (J.H. Hubbell, Rad. Res. 70, 58, 1977, and Int. J. Appl. Radiat. Isot. 33, 1269, 1982) were compared with the earlier values used in establishing NBS exposure standards (J.H. Hubbell, Nat. Stand. Ref. Data Ser. 29, Nat. Bur. Stand. (U.S.), 1969). Only one appreciable change was found.

Stopping-power ratio. The most recent values (ICRU Report 37, 1984) were compared with the earlier values used in establishing NBS exposure standards (M. J. Berger and S. M. Seltzer, NASA SP-3012, 1964). The comparison for ^{60}Co gamma radiation was made by the staff of the Bureau International des Poids et Mesures, and confirmed at NBS. The comparisons for the other radionuclides were made at NBS.

The last previous change in NBS exposure standards was made on 1972 May 01. At that time the exposure rates for cobalt-60 and cesium-137 gamma rays were lowered by 0.7% and 0.6%, respectively, due to adoption as an NBS exposure standard of six spherical graphite cavity ionization chambers (Loftus, T.P., and Weaver, J.T., J. Res. Nat. Bur. Stand., 78A, 465, 1974).

APPENDIX B

DG 7890/86
TFN 234668
DB 851:156-163
1986 May 9

U. S. DEPARTMENT OF COMMERCE
NATIONAL BUREAU OF STANDARDS
GAITHERSBURG, MARYLAND 20899

Report of Exposure-rate Measurement

of

One Cesium-137 Source Engraved 3M151267

Submitted by

Colossal Medical Complex
Everytown, AD 12343

DG 8844/88
TFN 241000
DB 875:162-200
DB 882: 4-12
1988 Mar 08

U. S. DEPARTMENT OF COMMERCE
NATIONAL BUREAU OF STANDARDS
GAITHERSBURG, MD 20899

REPORT OF AIR-KERMA-RATE MEASUREMENT

Model 6711 Iodine-125 Seed — Lot No. ISW-804

Manufactured by: The 3M Company
Medical Products Division
New Brighton, MN 55112

For: Nonesuch University Hospital
Old Newtown, AC 12321

Received: 1988 Jan 26
Calibrated: 1988 Jan 29-Feb 29

The model 6711 seed is a welded titanium capsule containing a silver wire on which the radionuclide iodine-125 is adsorbed. The overall length of the seed is 4.5 mm and the outside diameter is 0.8 mm. No determination of radionuclidic purity was performed.

The strength of this seed is given in terms of "air-kerma strength", which is the product of air-kerma rate and the square of the distance in vacuum, in a direction perpendicular to the long axis of the seed. A reentrant ionization chamber that had been calibrated using standardized Model 6711-type seeds was used for the measurements. The standard seeds had been calibrated using a free-air ionization chamber. Details of the calibration of the reentrant chamber are given in: T. P. Loftus, "Exposure standardization of iodine-125 seeds used for brachytherapy," J. Res. Nat. Bur. Stand. 89, 295-303 (1984) and "Calibration of Gamma-Ray-Emitting Brachytherapy Sources at NBS", to be published as NBS Special Publication 250-19 (1988).

The mean source strength is determined from measurements for repeated placements of the seed in the reentrant chamber, where the seed assumes a random, horizontal position at the bottom of the reentrant tube for each placement.

This seed was measured on four different days. The data were corrected for decay using a half-life of 59.6 days, from NCRP Report 58, 2nd edition (1985). The results of these measurements are:

Measurement date	Number of seed placements	Stand. dev. of the mean (%)	Air-kerma strength 1988 Feb 16.5 ($Gy \cdot m^2/s$)
1988 Jan 29	12	0.2	9.52×10^{-9}
1988 Feb 05	12	0.2	9.54×10^{-9}
1988 Feb 22	12	0.2	9.59×10^{-9}
1988 Feb 29	12	0.2	9.59×10^{-9}

The American Association of Physicists in Medicine has recommended that air kerma strength be given in the units micrograys meters squared per hour ("Specification of Brachytherapy Source Strength", AAPM Report No. 21, Am. Inst. of Phys., NY, June 1987). Adopting those units, and combining all measurements, the mean air-kerma strength on 1988 Feb 16.5 Eastern Standard Time (noon Feb 16) was

$$34.4\ \mu Gy \cdot m^2/h$$

with an overall uncertainty of ±6%, which does not take into account possible errors due to titanium K x rays (H. Kubo, Med. Phys. 12, 215, 1985; J. F. Williamson, submitted to Medical Physics).

The uncertainty associated with this calibration is obtained by combining the component uncertainties in quadrature. The random uncertainty components are calculated as standard deviations of the mean of replicate readings; other components are estimated and are assumed to have the approximate character of standard deviations. The overall uncertainty is two times the square root of the quadratic sum of all the component uncertainties; it is considered to have the approximate significance of a 95% confidence limit.

For the photons from iodine-125, the fraction of the secondary electron energy dissipated as bremsstrahlung is negligible, and air kerma K_{air} is related to the exposure X by the equation $K_{air} = X\ (W/e)$ where W/e is the energy expended in air per unit charge. Then the air-kerma strength in $\mu Gy \cdot m^2/h$ is divided by W/e = 0.00876 Gy/R to convert to exposure strength in $\mu R \cdot m^2/h$.

The manufacturer states the apparent activity as 34.42 mCi on 1988 Jan 25. Using the conversion factor supplied by the manufacturer, 40.3 $nR \cdot m^2/(mCi \cdot s)$, and 22 days decay, a value of 1074 $nR \cdot m^2/s$ = 33.9 $\mu Gy \cdot m^2/h$ is obtained, which is within 2 percent of the NBS value.

Information on technical aspects of this report may be obtained from J. T. Weaver, Radiation Physics, C214, National Bureau of Standards, Gaithersburg, MD 20899, (301) 975-5586.

Calibration performed by J. T. Weaver

Report approved by R. Loevinger

For the Director
by

Randall S. Caswell, Chief
Ionizing Radiation Division
Center for Radiation Research
National Measurement Laboratory

D-3 is same as A-1

Attachment concerning adjustment of NBS exposure rates.

Exposure rates were adjusted at NBS on 1986 Jan 01 to take into account recent refinements in some of the physical parameters. Exposure rates in all reports issued after 1986 Jan 01 are lower than the exposure rates in reports issued before that date. The changes in percent are as follows:

NBS primary standard:	Cavity Chambers			Free-air chambers
Radiation:	^{60}Co	^{137}Cs	^{192}Ir	^{125}I and x-rays
Humidity	-0.3	-0.3	-0.3	-0.2
Energy-absorption coefficient ratio	-0.1	0.0	0.0	N.A.
Stopping-power ratio	-0.7	-0.5	-0.4	N.A.
Total change	-1.1	-0.8	-0.7	-0.2

Laboratories with instruments calibrated prior to 1986 Jan 01 can bring their instruments into agreement with the new exposure rates by reducing the earlier calibration factors by the above total changes in percent.

Humidity. Before 1986 no correction was made for the effect of water vapor in the ambient air, since early NBS work had indicated a negligible effect. More recent work at several national laboratories has determined this effect with good accuracy. The values used are taken from ICRU Report 31, page 31, Figure 5.14. These factors are applied to the exposure rate determined by the NBS primary standard. No correction is made for the effect of water vapor on the reentrant chamber, since it is assumed that both the calibration of the chamber with the standard seeds and the calibration of unknown source take place in air with a relative humidity between 10% and 70%.

Energy-absorption coefficient ratio. The most recent values (J.H. Hubbell, Rad. Res. 70, 58, 1977, and Int. J. Appl. Radiat. Isot. 33, 1269, 1982) were compared with the earlier values used in establishing NBS exposure standards (J.H. Hubbell, Nat. Stand. Ref. Data Ser. 29, Nat. Bur. Stand. (U.S.), 1969). Only one appreciable change was found.

Stopping-power ratio. The most recent values (ICRU Report 37, 1984) were compared with the earlier values used in establishing NBS exposure standards (M. J. Berger and S. M. Seltzer, NASA SP-3012, 1964). The comparison for ^{60}Co gamma radiation was made by the staff of the Bureau International des Poids et Mesures, and confirmed at NBS. The comparisons for the other radionuclides were made at NBS.

The last previous change in NBS exposure standards was made on 1972 May 01. At that time the exposure rates for cobalt-60 and cesium-137 gamma rays were lowered by 0.7% and 0.6%, respectively, due to adoption as an NBS exposure standard of six spherical graphite cavity ionization chambers (Loftus, T.P., and Weaver, J.T., J. Res. Nat. Bur. Stand., 78A, 465, 1974).