National Institute of Standards & Technology

Certificate

Standard Reference Material® 2517a

High Resolution Wavelength Calibration Reference for 1510 nm – 1540 nm Acetylene $^{12}C_2H_2$

Serial No.:

This Standard Reference Material (SRM) is intended for wavelength calibration in the spectral region from 1510 nm to 1540 nm. SRM 2517a is a single-mode optical-fiber-coupled absorption cell containing acetylene ($^{12}C_2H_2$) gas at a pressure of 6.7 kPa (50 Torr). The absorption path length is 5 cm and the absorption lines are about 7 pm wide. The cell is packaged in a small instrument box (approximately 24 cm long x 12.5 cm wide x 9 cm high) with two FC/PC fiber connectors for the input and output of a user-supplied light source. This SRM can be used for high resolution applications such as calibrating a narrowband tunable laser, or lower resolution applications such as calibrating an optical spectrum analyzer. Acetylene has more than 50 accurately measured absorption lines in the 1500 nm wavelength region.

Certified Wavelength Values: The vacuum wavelengths of absorption lines in the R and P branch of the $\nu_1 + \nu_3$ rotational-vibrational band of $^{12}C_2H_2$ have been measured previously to high accuracy [1]. These literature values for the vacuum wavelengths were adjusted for the pressure shift due to the collisions between acetylene molecules at the 6.7 kPa (50 Torr) pressure within the SRM cell to obtain the certified wavelength values for this SRM. Details of the measurement procedure and data analysis for the determination of the pressure shift can be found in reference 2, and the uncertainty analysis for the SRM is documented in reference 3. A spectrum of the absorption band is shown in Figure 1 and certified wavelength values are given in Table 1. Figure 2 shows an expanded scan near line P25. The center wavelengths of 15 lines listed in Table 1 are certified with an uncertainty of 0.1 pm, 39 lines are certified with an uncertainty of 0.3 pm, and 2 lines are certified with an uncertainty of 0.6 pm. These uncertainties are the expanded uncertainties using a coverage factor $k = 2$ (i.e., the quoted uncertainty is $\pm 2\sigma$).

Expiration of Certification: The certification of this SRM is indefinite within the measurement uncertainties specified, provided the SRM is handled, stored, and used in accordance with the instructions given in this certificate. The gas is contained in a glass cell with all-glass seals at the windows and the fill port.

Development of the SRM and supporting measurements were performed by S.L. Gilbert and W.C. Swann of the NIST Optoelectronics Division.

Statistical consultation was provided by C.M. Wang of the NIST Statistical Engineering Division.

The support aspects involved in the preparation, certification, and issuance of this SRM were coordinated through the NIST Standard Reference Materials Program by C.S. Davis of the NIST Measurement Services Division.

Kent B. Rochford, Chief
Optoelectronics Division

John Rumble, Jr., Chief
Measurement Services Division

Gaithersburg, MD 20899
Certificate Issue Date: 05 November 2003
See Certificate Revision History on Last Page

Table 1. Certified Wavelengths for SRM 2517a

Literature values from reference 1 are adjusted for the pressure shift due to the 6.7 kPa (50 Torr) cell pressure. These vacuum wavelengths of the $\nu_1 + \nu_3$ band $^{12}C_2H_2$ are certified with the uncertainty indicated in parentheses for the last digits. The uncertainties quoted are the expanded uncertainty using a coverage factor $k = 2$ (i.e., the quoted uncertainty is $\pm 2\sigma$). The lines in bold were accurately characterized by NIST [2] and have the lowest uncertainty.

R Branch	Wavelength (nm)	P Branch	Wavelength (nm)
29	1511.7304(3)	1	1525.7599(6)
28	1512.0884(3)	2	1526.3140(3)
27	**1512.45273(12)**	**3**	**1526.87435(10)**
26	1512.8232(3)	**4**	**1527.44114(10)**
25	1513.2000(3)	**5**	**1528.01432(10)**
24	1513.5832(3)	**6**	**1528.59390(10)**
23	1513.9726(3)	7	1529.1799(3)
22	1514.3683(3)	8	1529.7723(3)
21	1514.7703(3)	9	1530.3711(3)
20	1515.1786(3)	**10**	**1530.97627(10)**
19	1515.5932(3)	11	1531.5879(3)
18	1516.0141(3)	12	1532.2060(3)
17	**1516.44130(11)**	**13**	**1532.83045(10)**
16	1516.8747(3)	**14**	**1533.46136(10)**
15	1517.3145(3)	15	1534.0987(3)
14	1517.7606(3)	16	1534.7425(3)
13	1518.2131(3)	17	1535.3928(3)
12	1518.6718(3)	18	1536.0495(6)
11	**1519.13686(10)**	19	1536.7126(3)
10	1519.6083(3)	20	1537.3822(3)
9	1520.0860(3)	21	1538.0583(3)
8	1520.5700(3)	22	1538.7409(3)
7	**1521.06040(10)**	**23**	**1539.42992(10)**
6	1521.5572(3)	**24**	**1540.12544(11)**
5	1522.0603(3)	**25**	**1540.82744(11)**
4	1522.5697(3)	26	1541.5359(3)
3	1523.0855(3)	27	1542.2508(3)
2	1523.6077(3)		
1	**1524.13609(10)**		

Storage and Handling: The protective caps provided for the FC/PC fiber connectors should be replaced when the SRM is not in use. This SRM is intended to be used in a laboratory environment near ambient room temperature (22 °C ± 5 °C). The user should avoid exposing the unit to large temperature variations, temperature cycling, or mechanical shock, as these may cause the optical alignment to degrade. Such optical misalignment affects the throughput of the SRM but will not shift the centers of the absorption lines. A more serious but less likely problem is cell breakage or leakage. The unit should be replaced if the linewidths or depths differ significantly from those shown in Figures 1 through 4 when measured using comparable resolution.

Measurement Conditions and Procedure: The long term stability of acetylene and the use of fundamental molecular absorption lines render the SRM insensitive to changes in environmental conditions. The purpose of the certification procedure is to verify that the unit contains the correct pressure of $^{12}C_2H_2$ gas and has no significant contaminants that produce additional absorption lines. Measurements are made using a tunable diode laser (~1 MHz linewidth) and a calibrated wavelength meter. Spectra similar to that shown in Figure 2 are taken of each SRM unit and one or more lines are accurately fit to verify the line's center using the procedure described in reference 2.

INSTRUCTIONS FOR USE

General Considerations: The SRM can be used to calibrate a laser or wavelength measuring instrument in the 1510 nm to 1540 nm region. The values in Table 1 are vacuum wavelengths; if the user requires the wavelength in air, the appropriate correction for the index of refraction of air must be applied [4]. Depending on what type of instrument is being calibrated, a user-supplied broadband source or a tunable narrowband source may be used. Typical optical connections are shown in Figure 5. The unit is bi-directional (has no preferred input/output port); connections to the unit should be made using single-mode optical fibers terminated with clean FC/PC connectors.

Use With a Broadband Source: A broadband source in the 1500 nm region (such as a light emitting diode, white light, or amplified spontaneous emission source) is useful when calibrating an instrument such as a diffraction grating-based optical spectrum analyzer. A schematic for this type of calibration is shown in Figure 5(a). Light from the broadband source is coupled into the SRM and the output (transmission through the SRM) is connected to the instrument that is being calibrated. The absorption lines of acetylene appear as dips in the spectrum of the light source. In general, the dips will not be as deep as those shown in Figure 1; most instruments of this type will have a resolution bandwidth that is significantly larger than the widths of the SRM absorption lines. An example of this effect is shown in Figures 3 and 4, where the spectrum in the region of lines P8–10 is observed using a tunable diode laser (Figure 3) or a broadband source and an optical spectrum analyzer set to 0.05 nm resolution (Figure 4).

Use With a Tunable Source: The SRM can be used to calibrate the wavelength scale of a tunable source in this region (such as a diode laser, a fiber laser, or a source filtered by a tunable filter). A schematic for this type of calibration is shown in Figure 5(b). The laser is tuned over one or more of the acetylene absorption lines. The transmission through the SRM is monitored by a detector; the transmitted power passes through a minimum at the center of an absorption line. Alternatively, a tunable laser source and the SRM can be used to check the calibration of a wavelength meter by measuring the wavelength of the laser (using the wavelength meter) as the laser is tuned through an absorption line.

Suggested Procedure for Low-Accuracy Requirements; Calibration Uncertainty > 30 pm: If calibrating an instrument using a broadband source, use an instrument resolution of ≤ 0.1 nm. If using a tunable source, use a data point density of at least one point every 0.005 nm (5 pm). After identifying a particular absorption line by comparing to the spectrum in Figure 1, find the center or minimum point of the line. Calibrate the instrument to the center wavelength of this line (from Table 1) using the calibration procedure specified by the instrument manufacturer. The instrument's linearity can be checked by repeating the procedure for a different absorption line and comparing it to the value listed in Table 1.

Suggested Procedure for Moderate-Accuracy Requirements; Calibration Uncertainty in the Approximate Range of 3 pm to 30 pm: If the source power varies significantly with wavelength, divide the SRM transmission spectrum by the source spectrum to obtain a normalized trace. After identifying a particular absorption line by comparing to the spectrum in Figure 1, make a high resolution scan of the line. If calibrating an instrument using a broadband source, use an instrument resolution of ≤ 0.05 nm. If using a tunable source, use a data point density of at least one point every

0.002 nm (2 pm). Find the wavelength readings on both sides of the line where the absorption is 50 % of the maximum; the line center is half-way between these two wavelength readings. For higher accuracy results, repeat this procedure five times and take the average of the measurements. Alternatively, the line center can be determined by fitting the central portion using a 4th order polynomial. Calibrate the instrument to the center wavelength of this line (from Table 1) using the calibration procedure specified by the instrument manufacturer. The instrument's linearity can be checked by repeating the procedure for a different absorption line and comparing it to the value listed in Table 1.

Suggested Procedure for High-Accuracy Requirements; Calibration Uncertainty < 3 pm: Connect a narrowband tunable light source (source bandwidth ≤ 1 pm) to one of the fiber connectors on the SRM unit. After identifying a particular absorption line by comparing to the spectrum in Figure 1, make a high resolution scan of the line. Use a data point density of at least one point every 1 pm and divide the SRM transmission spectrum by the source spectrum to obtain a normalized trace. Using a fitting technique such as the least squares, fit the absorption data to a Lorentzian or Voigt lineshape. Details of a line fitting procedure and potential errors sources can be found in reference 2, which is also included as an appendix in reference 3. Calibrate the instrument to the center wavelength of this line (from Table 1) using the calibration procedure specified by the instrument manufacturer. The instrument's linearity can be checked by repeating the procedure for a different absorption line and comparing it to the value listed in Table 1. **NOTE:** Highly reproducible *relative* wavelength measurements can be made using the procedure described for moderate-accuracy requirements. However, due to the presence of nearby lines, the procedure described in this paragraph is recommended to achieve high-accuracy *absolute* wavelength calibration.

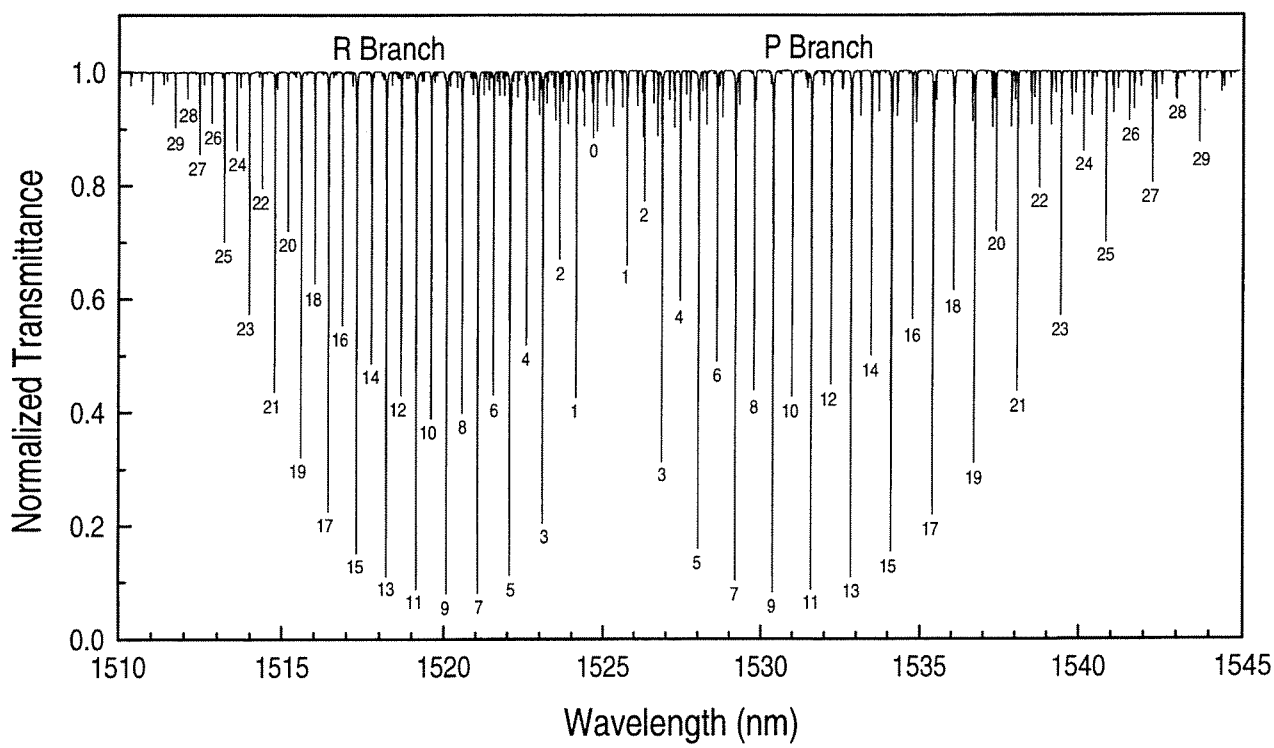

Figure 1. Normalized spectrum of SRM 2517a obtained by scanning a tunable diode laser and measuring the laser power transmitted through a SRM unit. The SRM contains a 5 cm long absorption cell filled with acetylene $^{12}C_2H_2$ to a pressure of 6.7 kPa (50 Torr). A file containing these data can be downloaded from NIST at http://ois.nist.gov/srmcatalog/datafiles/.

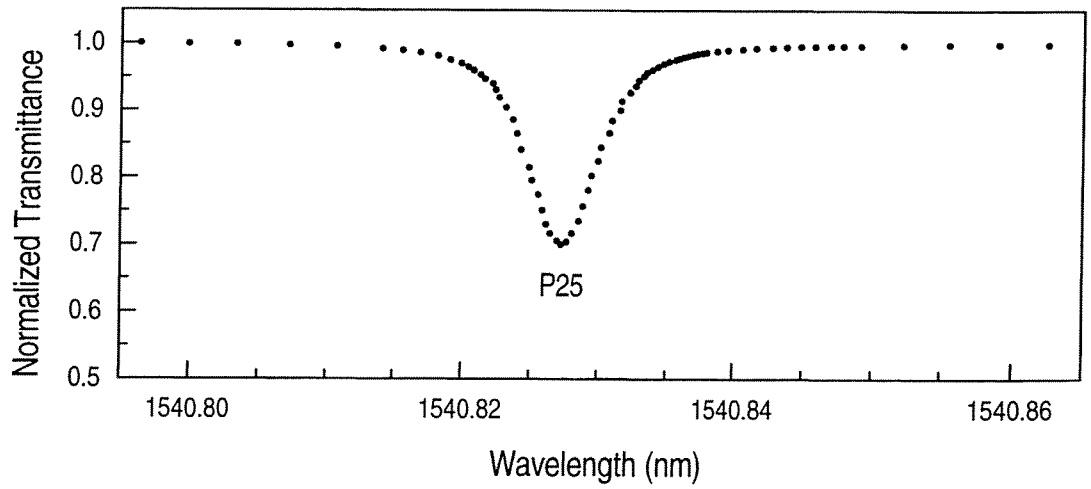

Figure 2. Spectrum of line P25 from Figure 1 obtained by scanning a tunable diode laser.

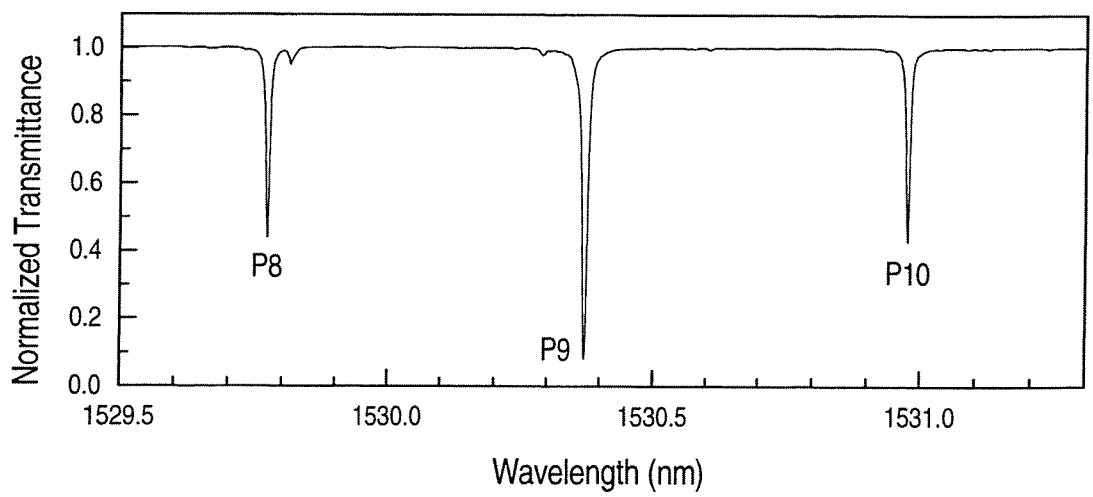

Figure 3. Spectrum of the P8, P9, and P10 lines from Figure 1 obtained by scanning a tunable diode laser.

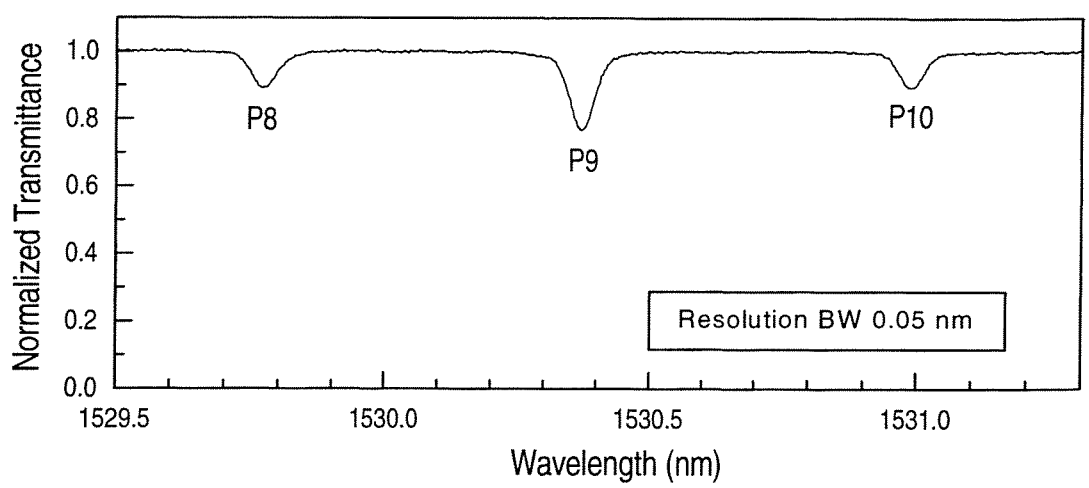

Figure 4. Spectrum of the P8, P9, and P10 lines obtained using a broadband source and an optical spectrum analyzer set to 0.05 nm resolution.

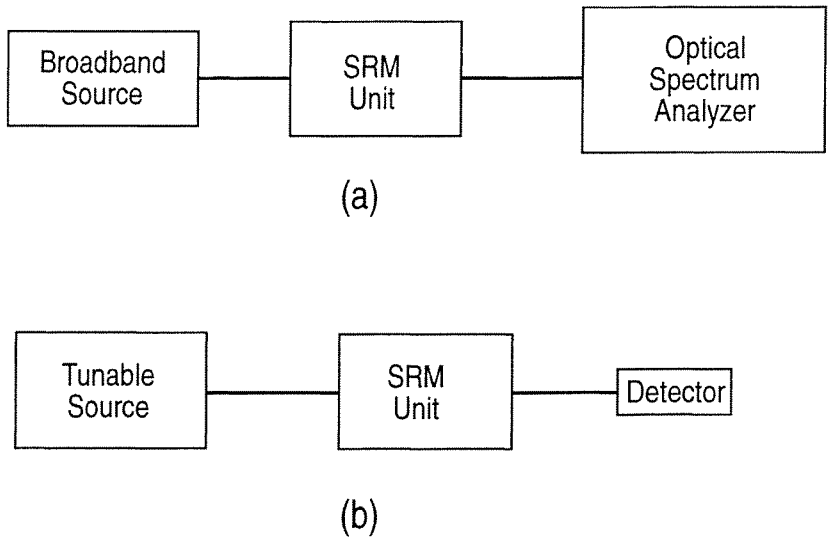

Figure 5. (a) Schematic of technique when using the SRM and a broadband source to calibrate an optical spectrum analyzer. (b) Schematic of technique when using the SRM to calibrate a tunable source. A wavelength meter can be calibrated by using a tunable laser in the configuration shown in (b) and measuring its wavelength using the wavelength meter.

REFERENCES

[1] Nakagawa, K.; Labachelerie, M.; Awaji, Y.; Kourogi, M.; *Accurate Optical Frequency Atlas of the 1.5 μm Bands of Acetylene*; J. Opt. Soc. Am. B, Vol. 13, pp. 2708-2714 (1996).

[2] Swann, W.C.; Gilbert, S.L.; *Pressure-Induced Shift and Broadening of 1510 to 1540 nm Acetylene Wavelength Calibration Lines*; J. Opt. Soc. Am. B, Vol. 17, pp. 1263-1270 (2000).

[3] Gilbert, S.L.; Swann, W.C.; *Acetylene $^{12}C_2H_2$ Absorption Reference for 1510 to 1540 nm Wavelength Calibration – SRM 2517a*; NIST Special Publication 260-133 (2001 Edition).

[4] Edlen, B.; *The Refractive Index of Air*; Metrologia, Vol 2, p. 12 (1966); and *CRC Handbook of Chemistry and Physics*; 77th Ed., pp. 10-266 (1996).

Certificate Revision History: 05 November 2003 (This certificate reflects editorial and contact changes); 11 December 2000 (Original certificate date).

Users of this SRM should ensure that the certificate in their possession is current. This can be accomplished by contacting the SRM Program at: telephone (30l) 975-6776; fax (301) 926-4751; e-mail srminfo@nist.gov; or via the Internet http://www.nist.gov/srm.